Polo Estate 1998 ➤

Heating, air conditioning

Edition 11.1999

satelettronica

Protected by copyright. Copying for private or commercial purposes, in part or in whole, is not permitted unless authorised by Volkswagen AG. Volkswagen AG does not guarantee or accept any liability with respect to the correctness of information in this document. Copyright by Volkswagen AG.

List of Workshop Manual Repair GroupsList of Workshop Manual Repair GroupsList of Workshop Manual Repair Groups

Polo Estate 1998 ➤

Heating, air conditioning

Repair Group

80 - Heating

87 - Air conditioning

Protected by copyright. Copying for private or commercial purposes, in part or in whole, is not permitted unless authorised by Volkswagen AG. Volkswagen AG does not guarantee or accept any liability with respect to the correctness of information in this document. Copyright by Volkswagen AG.

satelettronica

Technical information should always be available to the foremen and mechanics, because their careful and constant adherence to the instructions is essential to ensure vehicle road-worthiness and safety. In addition, the normal basic safety precautions for working on motor vehicles must, as a matter of course, be observed.

All rights reserved.
No reproduction without prior agreement from publisher.

Copyright © 2011 Volkswagen AG, Wolfsburg

00056406320

Contents

80 - Heating 1
1 **Servicing heating system** 1
1.1 Servicing heating system 1
1.2 Passenger compartment heating 1
1.3 Removing fresh air blower -V2- 7
1.4 Removing and installing dust and pollen filter 7
1.5 Removing vent 9
1.6 Removing and installing heated air and fresh air controls 13
1.7 Checking ventilation 15
2 **Removing and installing heater unit** 16
2.1 Removing and installing heater unit 16
3 **Dismantling and assembling heater** 19
3.1 Dismantling and assembling heater 19
4 **Dismantling and assembling heated air and fresh air controls** 23
4.1 Dismantling and assembling heated air and fresh air controls 23
5 **Installing and adjusting cables** 25
5.1 Installing and adjusting cables 25

87 - Air conditioning 30
1 **Notes on repair work to vehicles with air conditioning and on handling refrigerant** 30
1.1 Notes on repair work to vehicles with air conditioning and on handling refrigerant 30
1.2 Safety precautions when working on vehicles with air conditioning and when handling refrigerant R134a 30
2 **Air conditioner with manual controls** 32
2.1 Air conditioner with manual controls 32
2.2 Air conditioning and heating - Passenger compartment 32
2.3 Removing and installing heating and air conditioning controls 37
2.4 Dismantling and assembling heating and air conditioning controls 40
2.5 Installing and adjusting heating and air conditioning cables 42
2.6 Air conditioning and heating system - Engine compartment 46
2.7 Removing and installing air conditioner compressor bracket, engine code: APE 53
2.8 Servicing magnetic coupling -N25-; Sanden unit 60
2.9 Removing magnetic coupling from compressor and refitting again 65
3 **Servicing refrigerant circuit, which may only be performed at workshops with specially trained personnel (specialist repair workshop for air conditioning systems)** 68
3.1 Servicing refrigerant circuit, which may only be performed at workshops with specially trained personnel (specialist repair workshop for air conditioning systems) 68
3.2 Tools 68
3.3 Renewing refrigerant circuit components 69
3.4 Checking high pressure sender -G65- 81
3.5 Removing and installing heater and air conditioner 85
3.6 Dismantling and assembling evaporator housing 88
3.7 Removing expansion valve 92
3.8 Removing and installing condenser 96
4 **Capacities** 99
4.1 Capacities 99
4.2 Refrigerant R134a 99
4.3 Refrigerant oil 99

Protected by copyright. Copying for private or commercial purposes, in part or in whole, is not permitted unless authorised by Volkswagen AG. Volkswagen AG does not guarantee or accept any liability with respect to the correctness of information in this document. Copyright by Volkswagen AG.
sateletronica

Protected by copyright. Copying for private or commercial purposes, in part or in whole, is not permitted unless authorised by Volkswagen AG. Volkswagen AG does not guarantee or accept any liability with respect to the correctness of information in this document. Copyright by Volkswagen AG.
satelettronica

80 - Heating

1 - Servicing heating system

1.1 - Servicing heating system

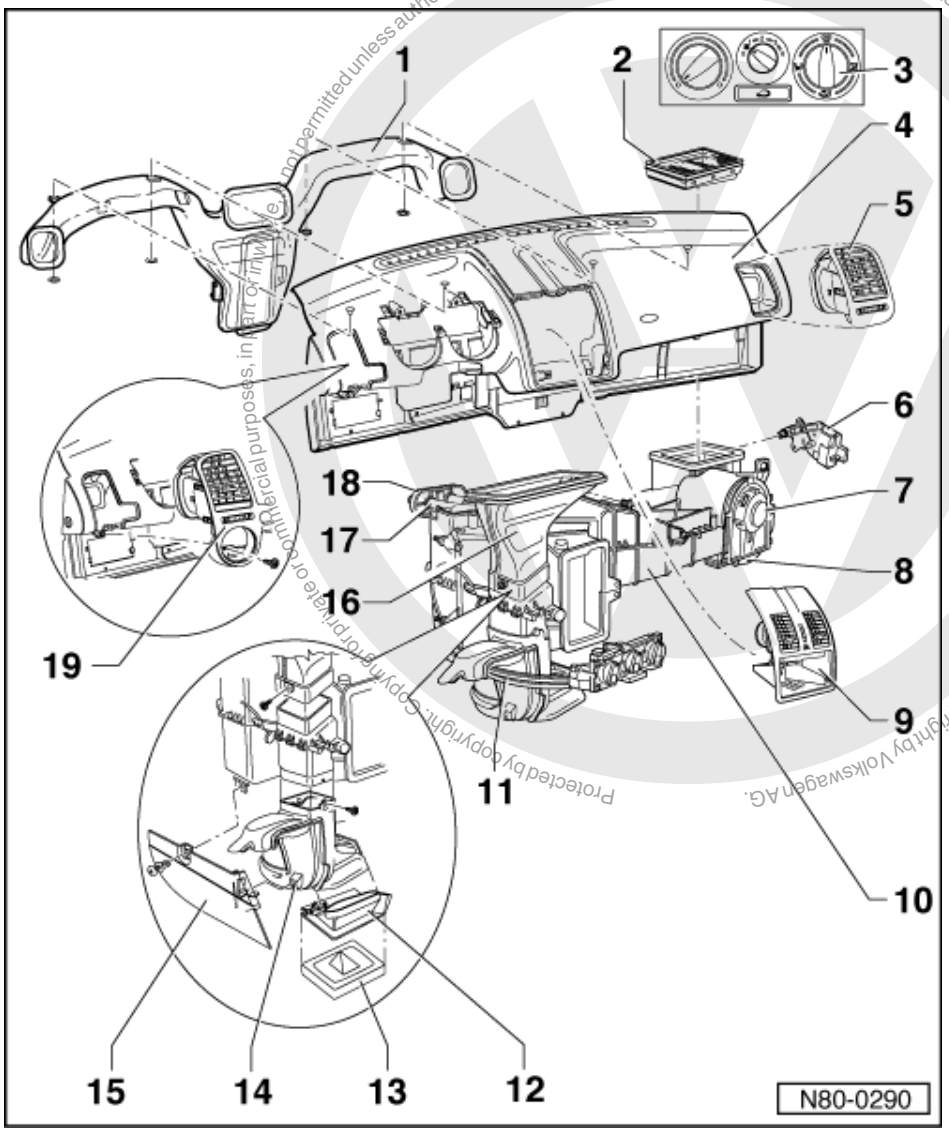

1.2 - Passenger compartment heating

Warning!
Always disconnect the battery earth strap before working on the electrical system.

Notes:

- Obtain radio anti-theft coding before disconnecting the battery.

Protected by copyright. Copyright by Volkswagen AG.
Commercial purposes, in part or in whole, are not permitted unless authorised by Volkswagen AG. Volkswagen AG does not guarantee or accept any liability with respect to the correctness of information in this document.
satelettronica

- Check vehicle equipment (radio, clock, electric windows) as per Workshop Manual and/or Owner's Manual when reconnecting the battery.

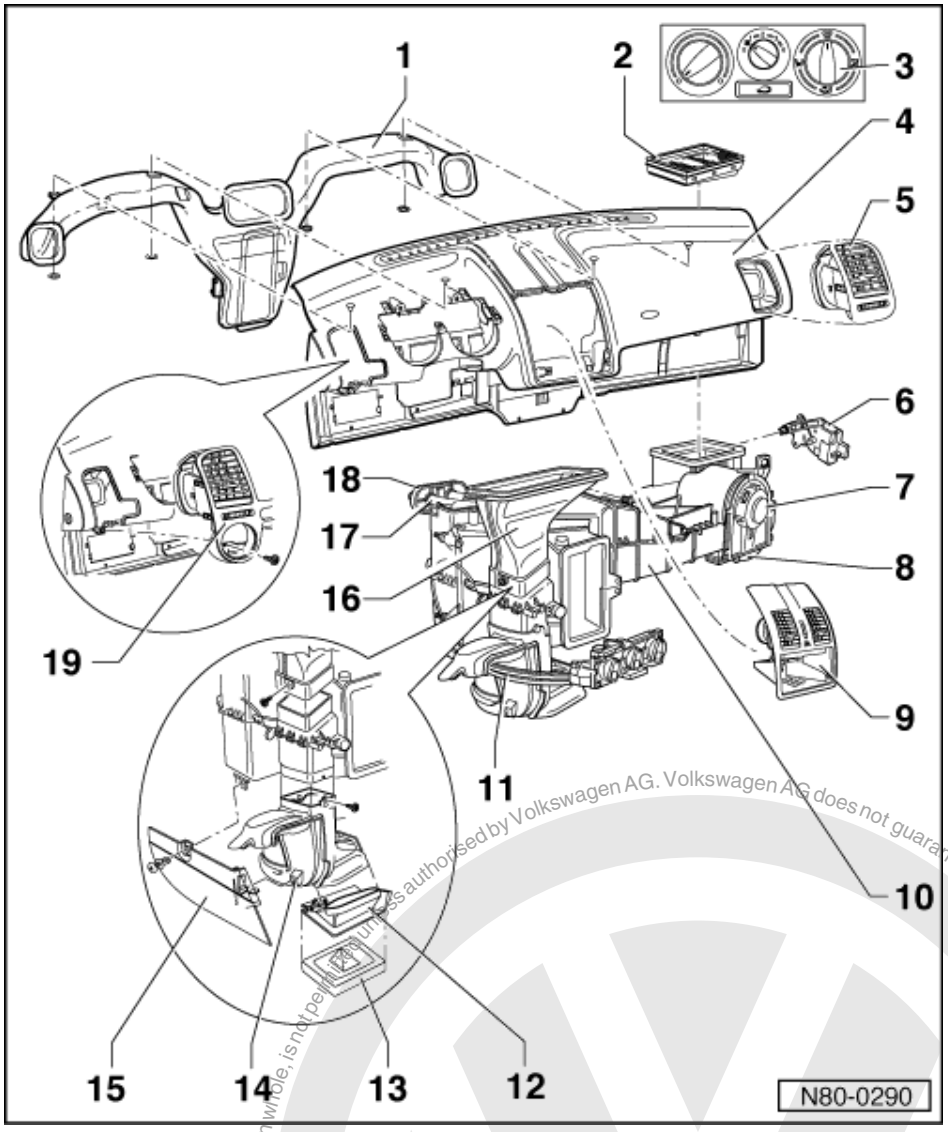

1 Air duct

2 Dust and pollen filter
- In plenum chamber
- With activated charcoal filter
- Removing and installing => Page 7

3 Fresh air and heated air controls
- With fresh air blower switch -E9-
- With fresh air and air recirculation switch -E159-
- Removing and installing => Page 13
- Dismantling and assembling => Page 23
- Installing and adjusting cables => Page 25

Protected by copyright. Copying for private or commercial purposes, in whole or in part, is not permitted unless authorised by Volkswagen AG. Volkswagen AG does not guarantee or accept any liability with respect to the correctness of information in this document. Copyright by Volkswagen AG.
satelettronica

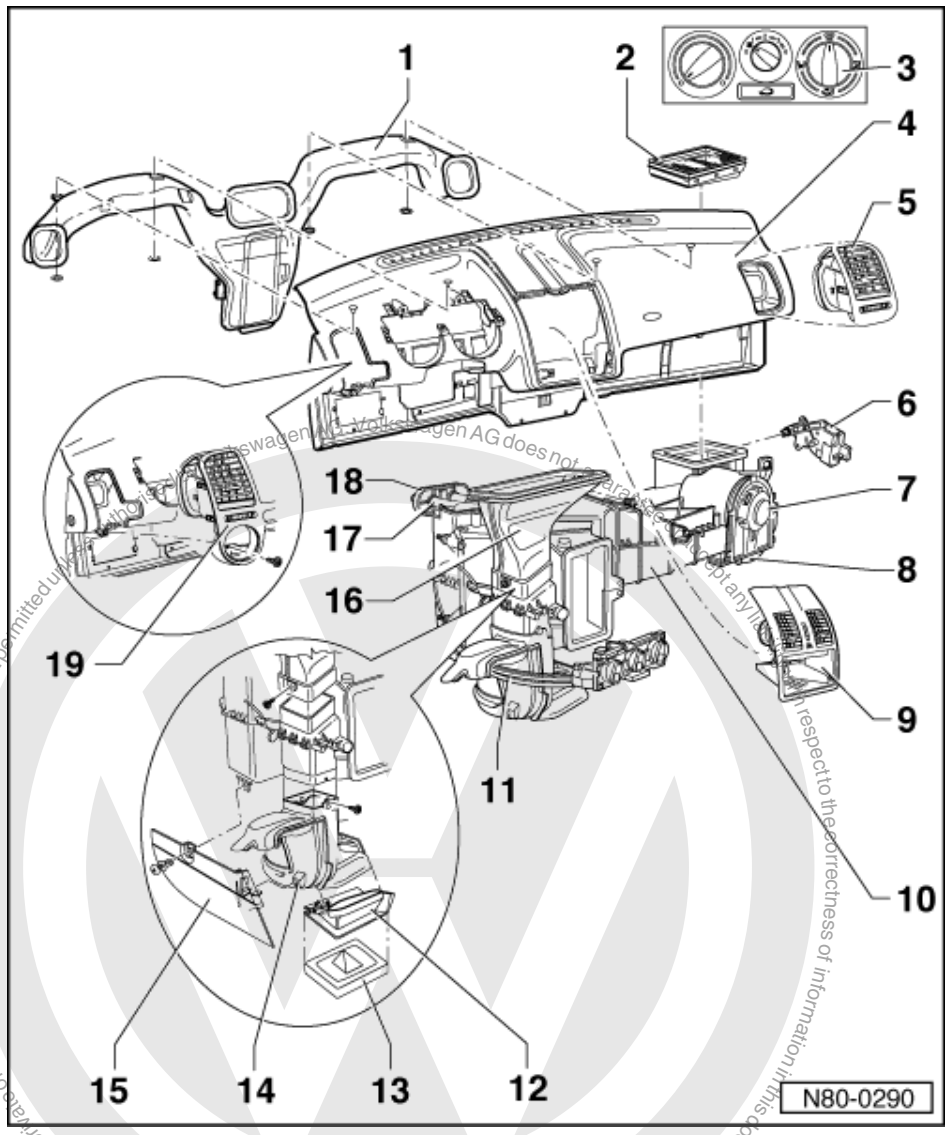

4 Dash panel
- Removing and installing

=> General body repairs, interior; Repair Group 70; Removing and installing dash panel Removing and installing dash panel

- Installing => Page 21

5 Front passenger's vent
- Removing vent => Page 9

6 Fresh air/air recirculation positioning motor -V154-

7 Fresh air blower -V2-
- Removing =>Fig. 7 , Removing and installing fresh air blower -V2-

satelettronica

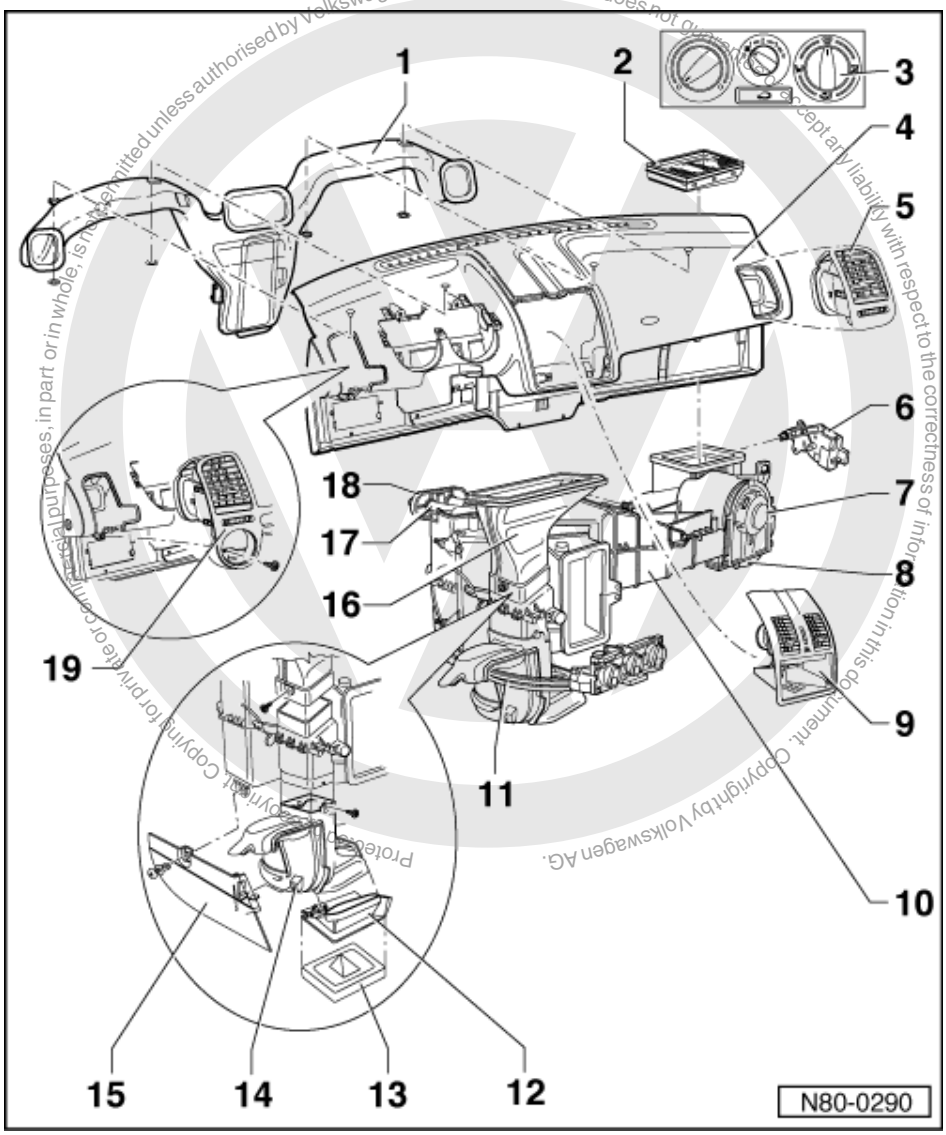

8 Fresh air blower series resistor with overheating fuse -N24-
- Removing =>Page 7 , Removing fresh air blower -V2-

9 Central vent
- Removing vent => Page 9

10 Heater
- Removing => Page 17

satelettronica

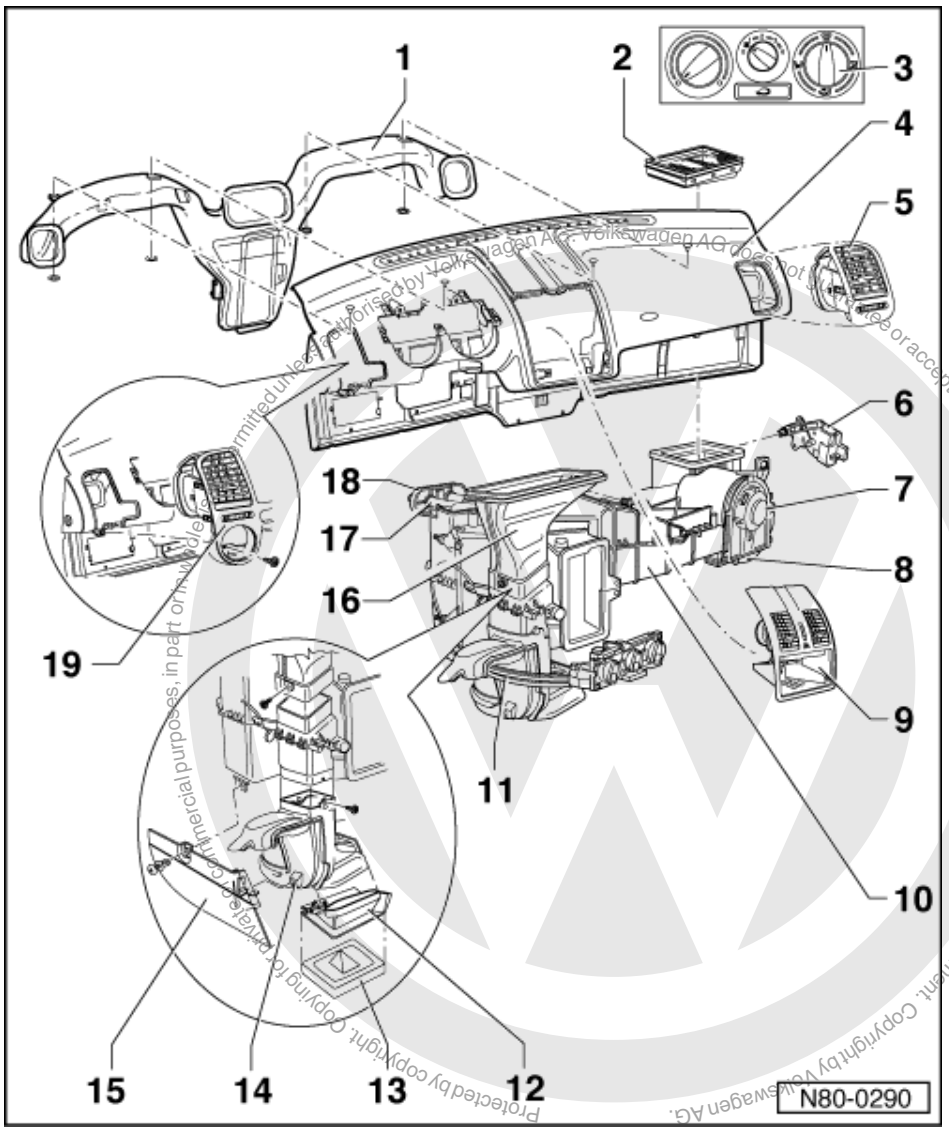

11 Cables
- Removing and installing => Page 25

12 Connecting piece

13 Cover

14 Footwell vent
- Removing vent => Page 9

15 Kick plate

16 Intermediate piece, defrost
- Renewing:
- Removing and installing dash panel

=> General body repairs, interior; Repair Group 70; Removing and installing dash panel Removing and installing dash panel

satelettronica

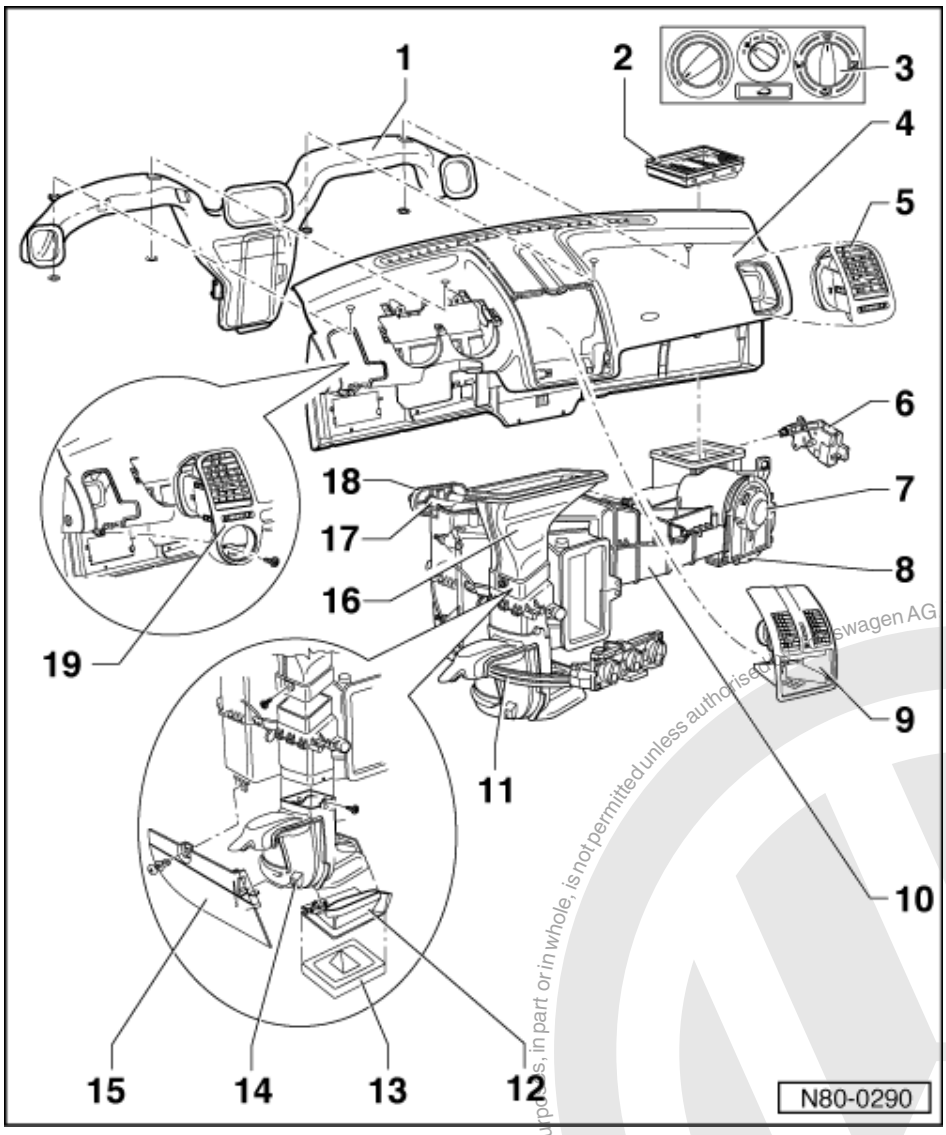

17 Heat exchanger

- Renewing:
- First remove the dash panel.

=> General body repairs, interior; Repair Group 70; Removing and installing dash panel Removing and installing dash panel

- Draincoolant
- Installing: => Page 19 dismantling and assembling heater
- After removal renew complete coolant

18 Heat exchanger/bulkhead seal

- Note installation position
  => Page 21

19 Right vent

- Removing vent => Page 9

Protected by copyright. Copying for private, commercial purposes, in part or in whole, is not permitted unless authorised by Volkswagen AG. Volkswagen AG does not guarantee or accept any liability with respect to the correctness of information in this document. Copyright by Volkswagen AG.
satelettronica

1.3 - Removing fresh air blower -V2-

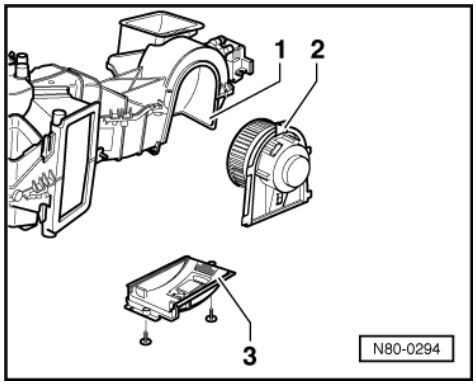

1 - Heater
2 - Fresh air blower -V2-
3 - Series resistor with overheating fuse for fresh air blower -N24-

Removing

First carry out the following work:

- Remove trim under the steering column.

=> General body repairs interior; Repair group 70; Removing trim under the steering column. Removing trim under the steering column.

- Remove centre console.

=> General body repairs interior; Repair group 70; Removing and installing centre console. Removing and installing centre console.

- Remove shelf on passenger side

=> General body repairs interior; Repair group 70; Removing and installing shelf on passenger side. Removing and installing shelf on passenger side.

- Remove foam covering under heater unit.
- Pull off connectors.
- Remove series resistor for fresh air blower -item 3-.
- Pull fresh air blower out downwards.

1.4 - Removing and installing dust and pollen filter

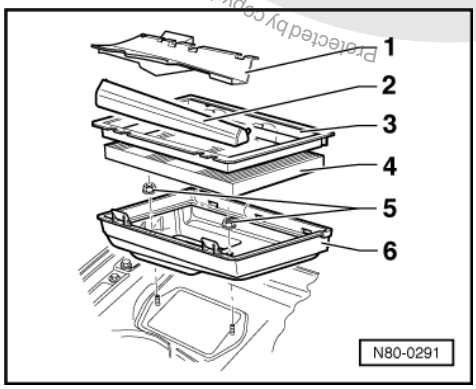

1 - -> Plenum chamber cover
2 - Cover
3 - Dust and pollen filter cover
4 - Dust and pollen filter

Protected by copyright. Copyright by Volkswagen AG.
Volkswagen AG does not guarantee or accept any liability with respect to the correctness of information in this document. Copyright by Volkswagen AG.
satelettronica

5 - Plastic nut, 2.5 Nm
6 - Filter housing

Removing

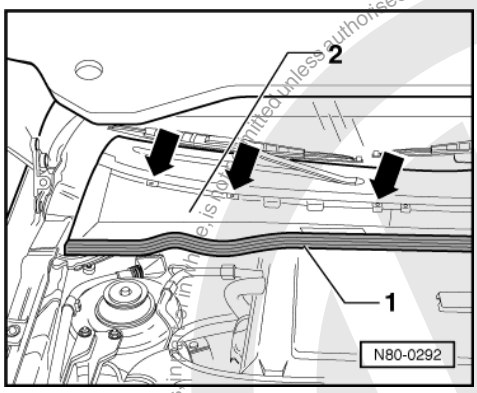

- Starting from the right-hand side of plenum chamber cover, pull rubber seal -1- off upwards to vehicle centre.
- Unclip locking lugs -arrows- on plenum chamber cover and remove plenum chamber cover -2-.

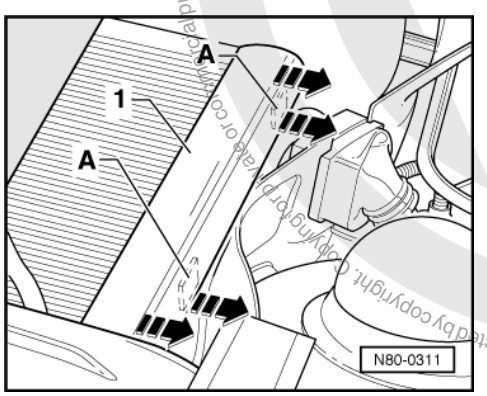

- -> Press out cover -1- and filter housing clips -A- in direction of arrows and take out filter element with frame upwards.
- Take filter element out of frame.

Installing

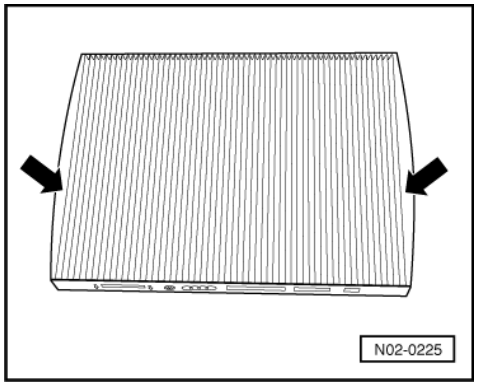

- -> Guide left and right frame edge into the first lamination -arrow- of the new filter element.

Protected by copyright. Copying for private or commercial purposes, in any form or medium, is not permitted unless authorised by Volkswagen AG. Volkswagen AG does not guarantee or accept any liability with respect to the correctness of information in this document. Copyright by Volkswagen AG.
satelettronica

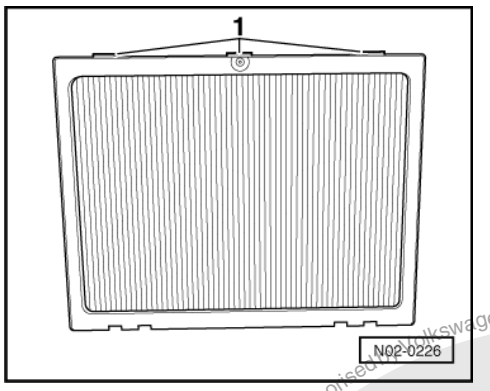

- -> Locate frame lugs -1- in respective filter housing recesses and press frame with filter element downwards.

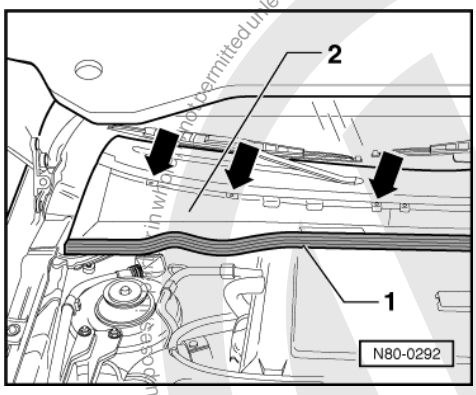

- -> Install plenum chamber cover -2- and secure locking lugs -arrows-.
- Press on rubber seal -1-.

1.5 - Removing vent

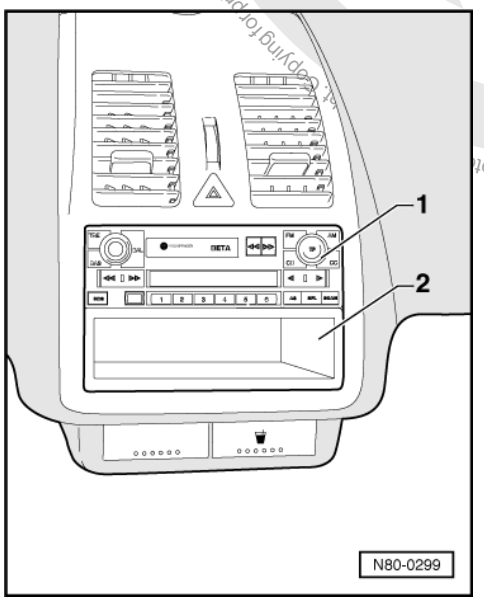

Remove centre vent

- -> Remove radio -1-.

Protected by copyright. Copying for private or commercial purposes, in part or in whole, is not permitted unless authorised by Volkswagen AG. Volkswagen AG does not guarantee or accept any liability with respect to the correctness of information in this document. Copyright by Volkswagen AG.
satelettronica

=> Radio, Telephone, Navigation; Repair group 91; Radio systems Radio systems

- Remove tray -2-.

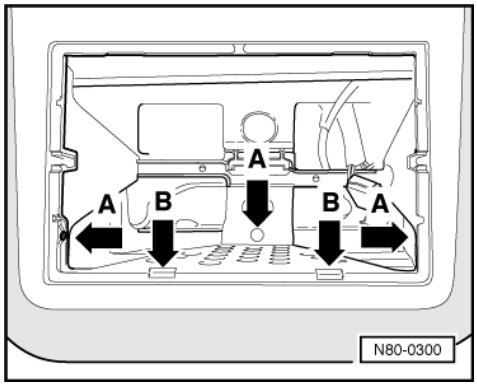

- -> Remove screws -arrows A-.
- Lever out retaining lugs -arrows B- upwards.

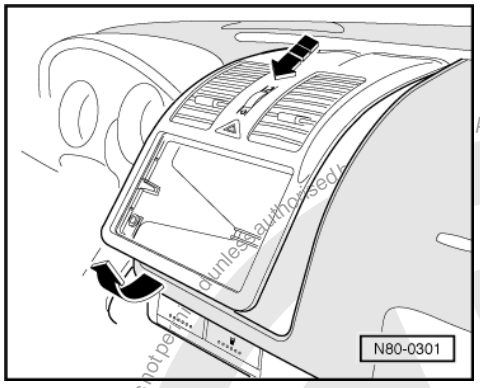

- -> Lift bottom of centre vent up and simultaneously pull it out.
- Separate connectors to warning lamp switch.

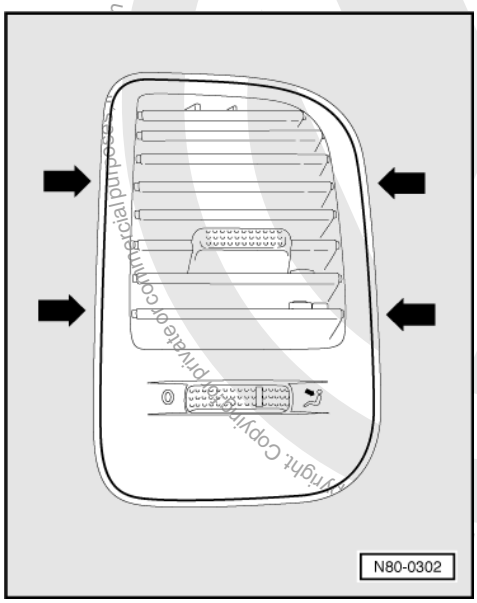

AG. Volkswagen AG does not guarantee or accept any liability with respect to the correctness of information in this document. Copyright by Volkswagen AG.
Copyright. Copying for private or commercial purposes, in whole or in part, is not permitted unless authorised.
satelettronica

Removing and installing front passenger's vent

Removing

- -> Lever out -arrows- using a screwdriver and protective support -arrows-.

- Pull vent out.

Installing

- Press vent in lightly until it locates.

Removing and installing driver's vent

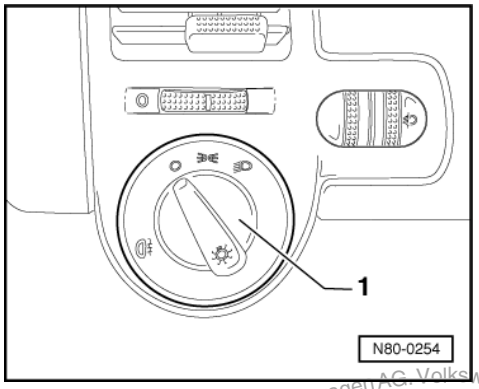

Removing

- -> Remove light switch -1-.

=> Electrical system; Repair group 96; Interior lights, bulbs, switches; Removing and installing lighting switch.
Interior lights, bulbs, switches Removing and installing lighting switch.

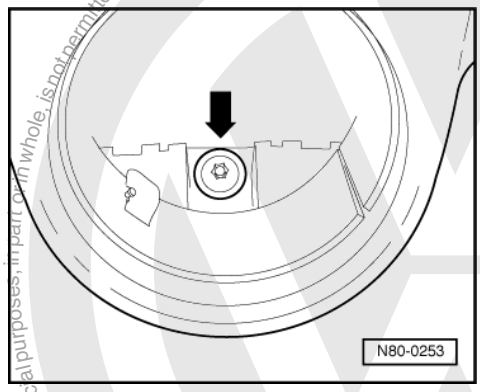

- -> Remove screw -arrow-.

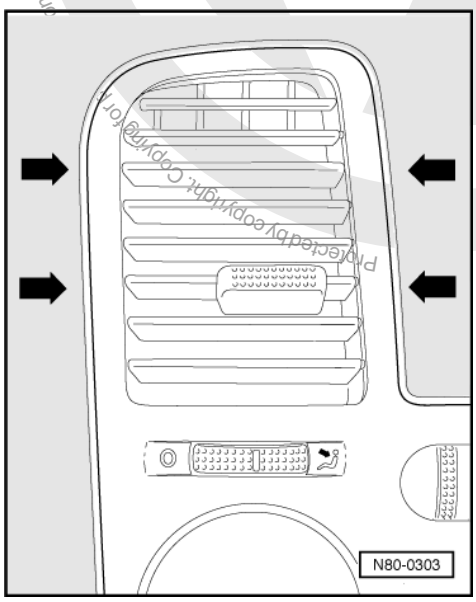

Protected by copyright. Copying for commercial purposes, in part or in whole, is not permitted unless authorised by Volkswagen AG. Volkswagen AG does not guarantee or accept any liability with respect to the correctness of information in this document. Copyright by Volkswagen AG.
satelettronica

- -> Lever out -arrows- using a screwdriver and protective support.
- Pull off headlight range control connector.
- Pull vent out.

Protected by copyright. Copying for private or commercial purposes, in part or in whole, is not permitted unless authorised by Volkswagen AG. Volkswagen AG does not guarantee or accept any liability with respect to the correctness of information in this document. Copyright by Volkswagen AG.

Installing

- Press in until the vent engages.

Removing footwell vent

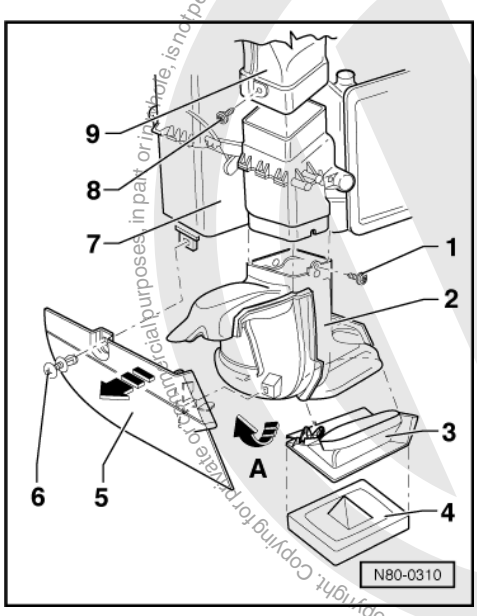

1 - -> Bolt
2 - Footwell vent
3 - Connecting piece
4 - Cover
5 - Kick plate
6 - Spreader rivet
7 - Heater
8 - Bolt
9 - Defrost intermediate piece

First carry out the following work:

- Remove trim under the steering column.

=> General body repairs interior; Repair group 70; Removing trim under the steering column. Removing trim under the steering column.

- Remove centre console.

=> General body repairs interior; Repair group 70; Removing and installing centre console. Removing and installing centre console.

- Remove shelf on passenger side

=> General body repairs interior; Repair group 70; Removing and installing shelf on passenger side. Removing and installing shelf on passenger side.

satelettronica

Removing

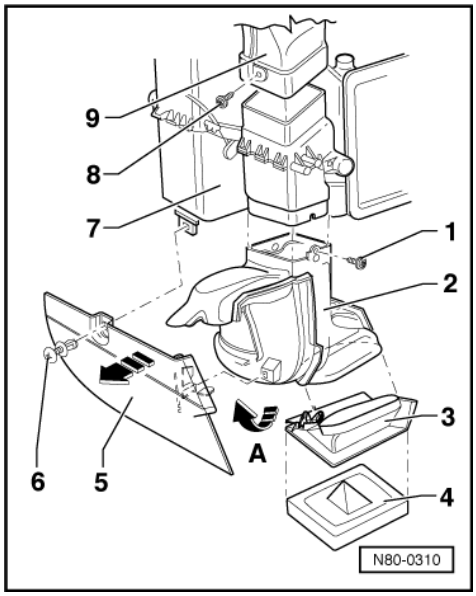

- Remove screw -1-.
- Pull footwell vent -2- out towards the driver's side footwell -arrow A-.

1.6 - Removing and installing heated air and fresh air controls

Removing

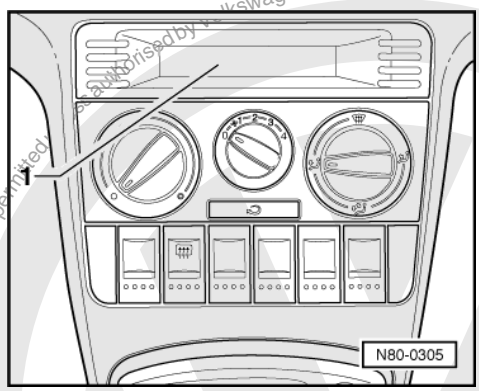

- -> Press down with fingertips in compartment -1-.

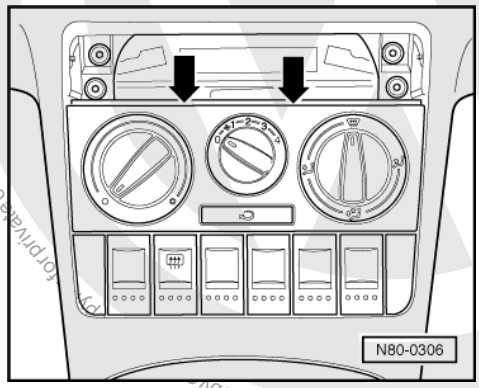

- -> Pull trim from controls -arrows-.

Volkswagen AG. Volkswagen AG does not guarantee or accept any liability with respect to the correctness of information in this document. Copyright by Volkswagen AG.
Reproduction, even in part, is not permitted without the express authorisation of Volkswagen AG. Copyright by Volkswagen AG.
Reproduction, even in part, is not permitted for private or commercial purposes, in part or in whole, is not permitted.
satelettronica

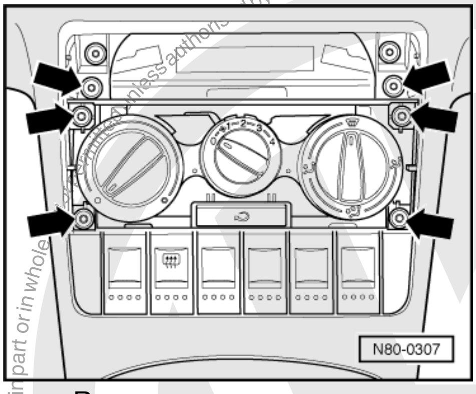

- -> Remove screws -arrows-.

Now carry out the following work:

- Remove trim under the steering column.

=> General body repairs interior; Repair group 70; Removing trim under the steering column. Removing trim under the steering column.

- Remove centre console.

=> General body repairs interior; Repair group 70; Removing and installing centre console. Removing and installing centre console.

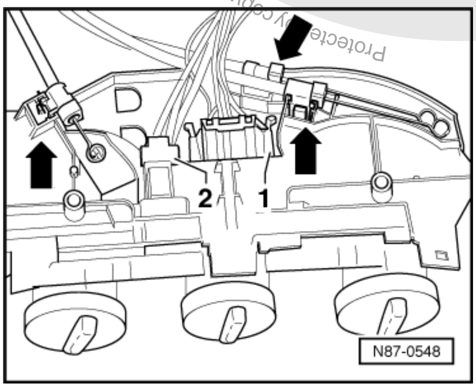

- -> Release cables on controls -arrows-.
- Pull off connectors -1- and -2-.

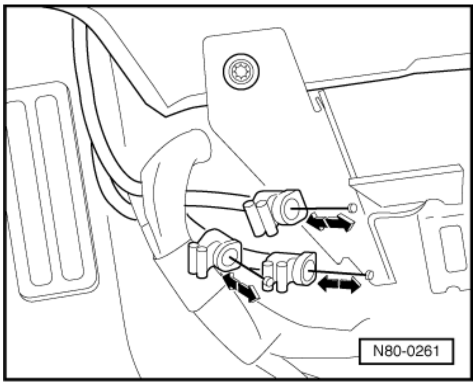

As soon as the controls have been removed check the function of the heated air and fresh air cables.

- -> To do this move the eyes of the centre cable to and fro in direction of arrow.
- Replace damaged or stiff cables.

Protected by copyright. Copying for private or commercial purposes, in part or in whole, is not permitted unless authorised by Volkswagen AG. Volkswagen AG does not guarantee or accept any liability with respect to the correctness of information in this document. Copyright by Volkswagen AG.

satelettronica

Installing

Notes:

- Cable sleeves are colour coded.
- Check cables before installing replace tight or damaged cables.

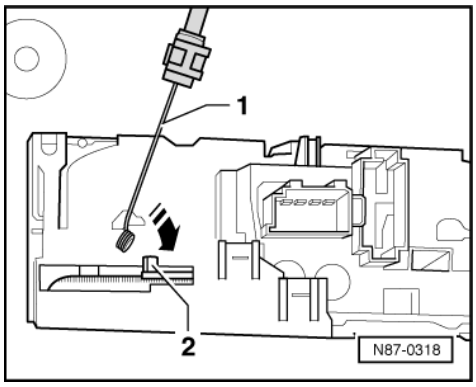

- All flaps must audibly move onto stops when turning controls.

- -> Angle wire end of cable -1- and press onto actuating arm -2- -arrow-.

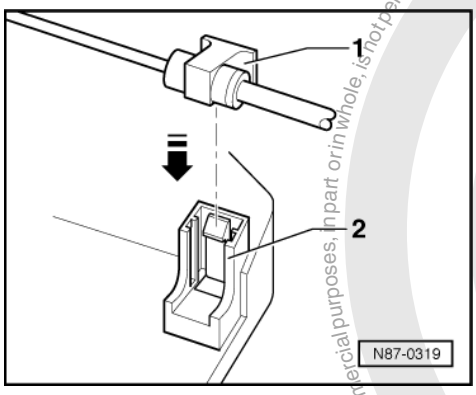

- -> Press cable for footwell/defrost, cable for temperature flap and cable for central flap -1- into locking device -2- until it engages.

Footwell/defrost flaps cable markings:
Left-hand drive: green
Right-hand drive: black

Central flap cable markings:
Left-hand drive: yellow
Right-hand drive: grey

Temperature flap cable markings: red
Left-hand drive: beige
Right-hand drive: white

1.7 - Checking ventilation

Notes:

- The stale air escapes via ventilation openings in the luggage compartment trim.
- If the ventilation is to function properly the ventilation openings must not be covered.
- The ventilation frames are located in side panel behind the bumper.

Protected by copyright. Copying for private or commercial purposes, in part or in whole, is not permitted unless authorised by Volkswagen AG. Volkswagen AG does not guarantee or accept any liability with respect to the correctness of information in this document. Copyright by Volkswagen AG.
satelettronica

Checking

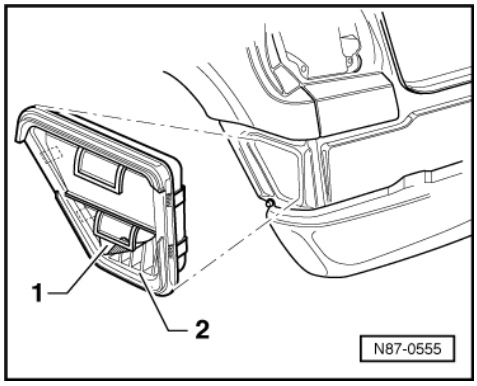

- -> The sealing lips -1- in the ventilation frame -2- must be free to move and close of their own accord.

2 - Removing and installing heater unit

2.1 - Removing and installing heater unit

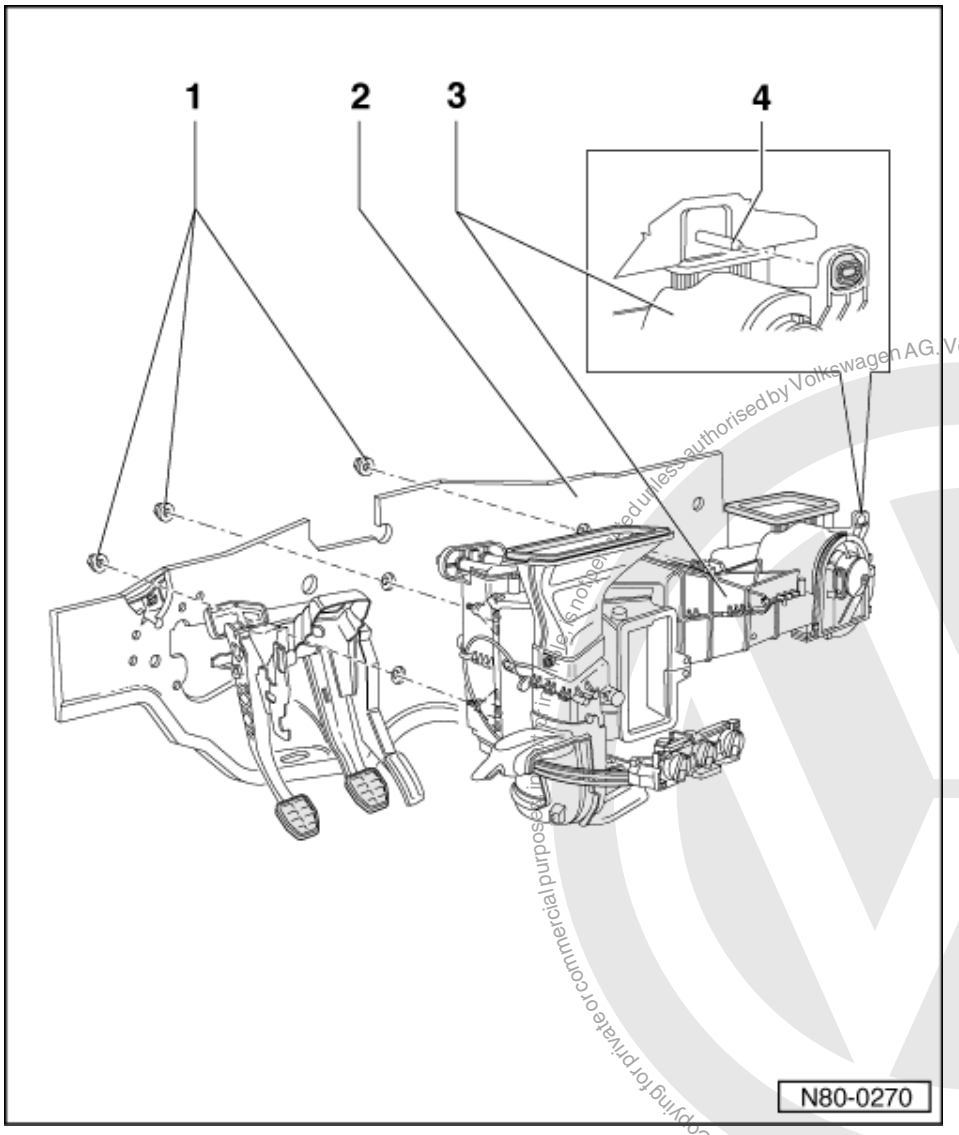

satelettronica
Protected by copyright. Copying for private or commercial purposes, in whole or in part, is not permitted unless authorised by Volkswagen AG. Volkswagen AG does not guarantee or accept any liability with respect to the correctness of information in this document. Copyright by Volkswagen AG.

Warning!
Always disconnect the battery earth strap before working on the electrical system.

Notes:

- Obtain radio anti-theft coding before disconnecting the battery.
- Check vehicle equipment (radio, clock, electric windows) as per Workshop Manual and/or Owner's Manual when reconnecting the battery.

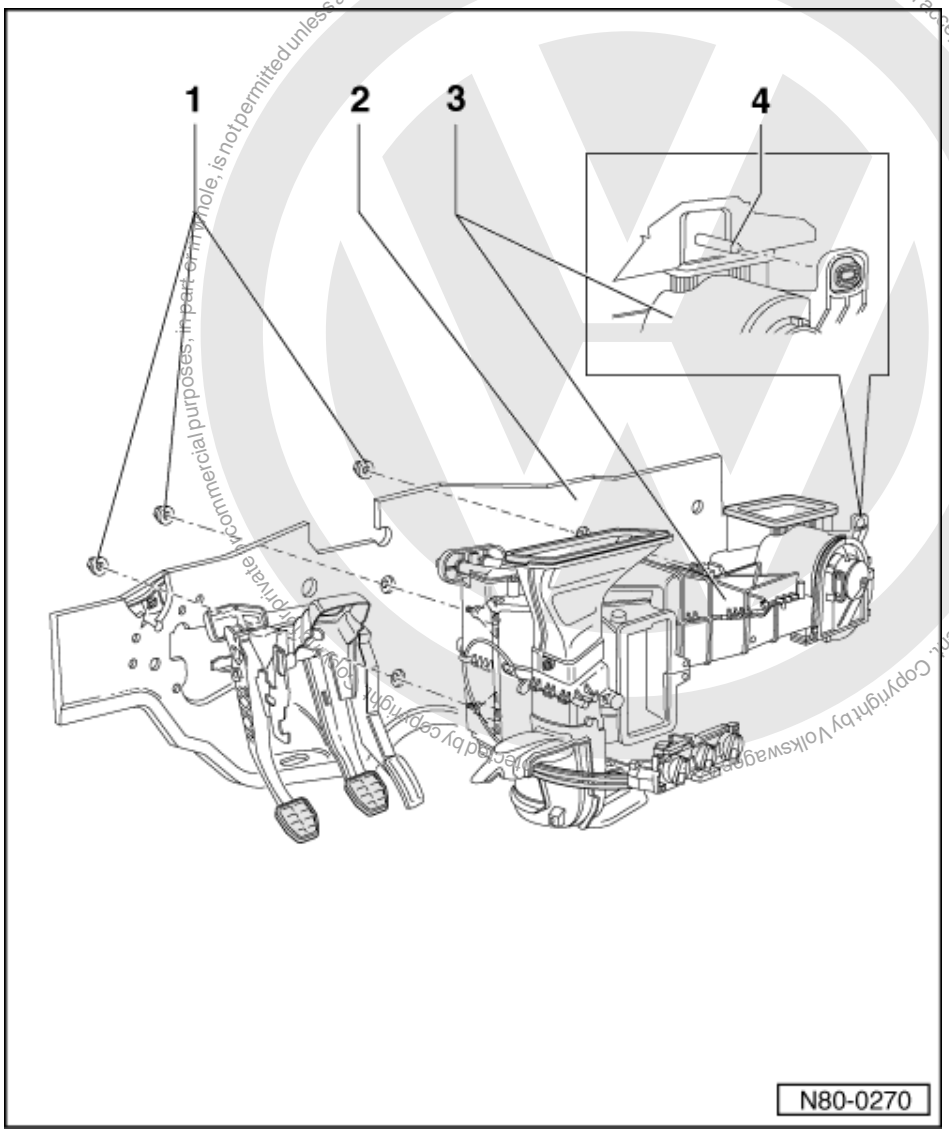

Copyright by Volkswagen AG. Volkswagen AG does not guarantee or accept any liability with respect to the correctness of information in this document. Copyright by Volkswagen AG. Volkswagen AG does not permitted unless authorised, is not permitted unless authorised by copyright owner, for commercial purposes, in part or in whole, is not permitted unless authorised by copyright owner, for private use.

satelettronica

Removing

Perform following work first:

- Remove dash panel

=> General body repairs, interior; Repair Group 70; Removing and installing dash panel Removing and installing dash panel

- Seal coolant hoses in engine compartment and remove from heat exchanger.

- Seal heat exchanger to prevent coolant from running out

1 Hexagon nut
- In engine compartment
- Qty. 3
- 4 Nm

2 Bulkhead

3 Heater
- Dismantling and assembling heater unit => Page 19

4 Guide pin

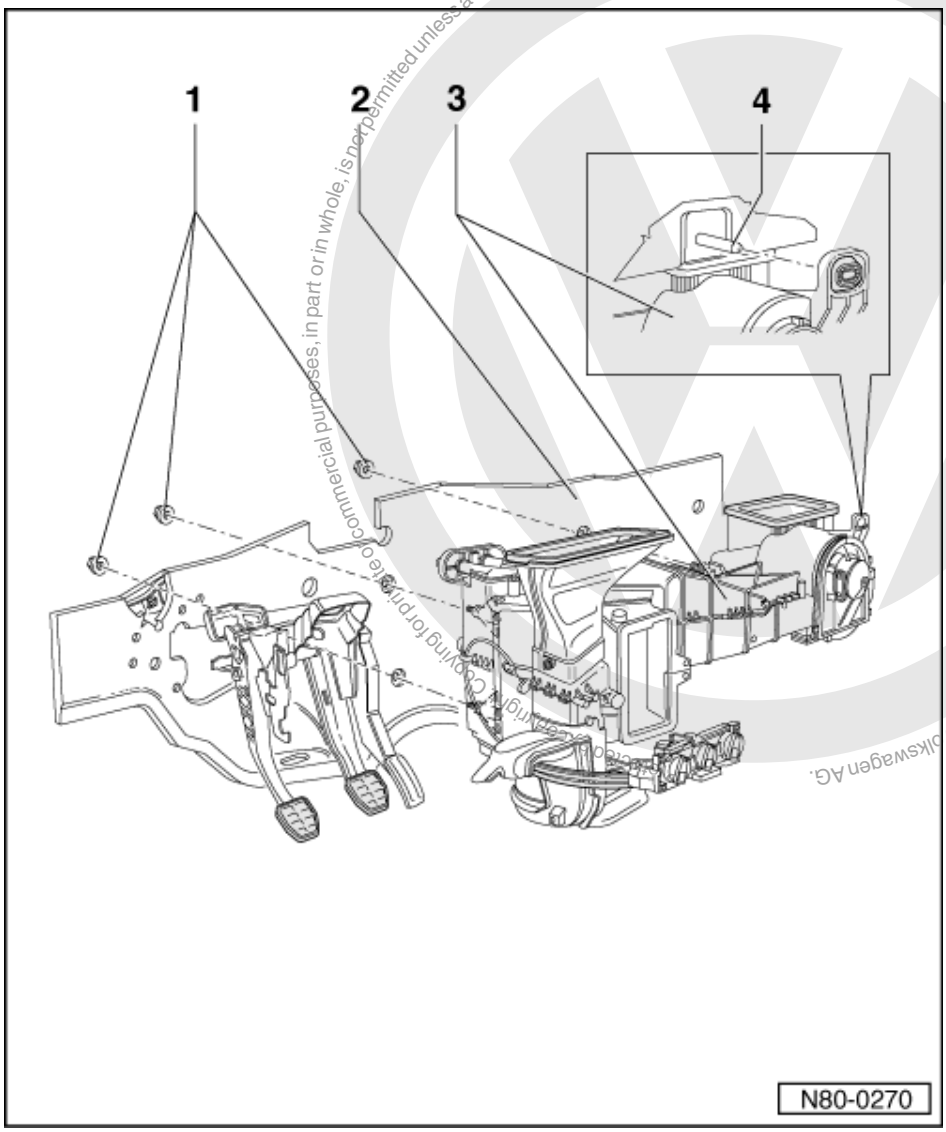

Copyright by Volkswagen AG. Volkswagen AG does not guarantee or accept any liability with respect to the correctness of information in this document. Copying for private or commercial purposes, in part or in whole, is not permitted unless authorised by Volkswagen AG.

satelettronica

Installing

- Place heater against bulkhead and push threaded studs through the corresponding holes.
- At the same time, make sure that the heater is sitting firmly on the guide pin -item 4 -
- Fit nuts onto studs from engine compartment and tighten onto bulkhead
- Check coolant level and top up.

3 - Dismantling and assembling heater

3.1 - Dismantling and assembling heater

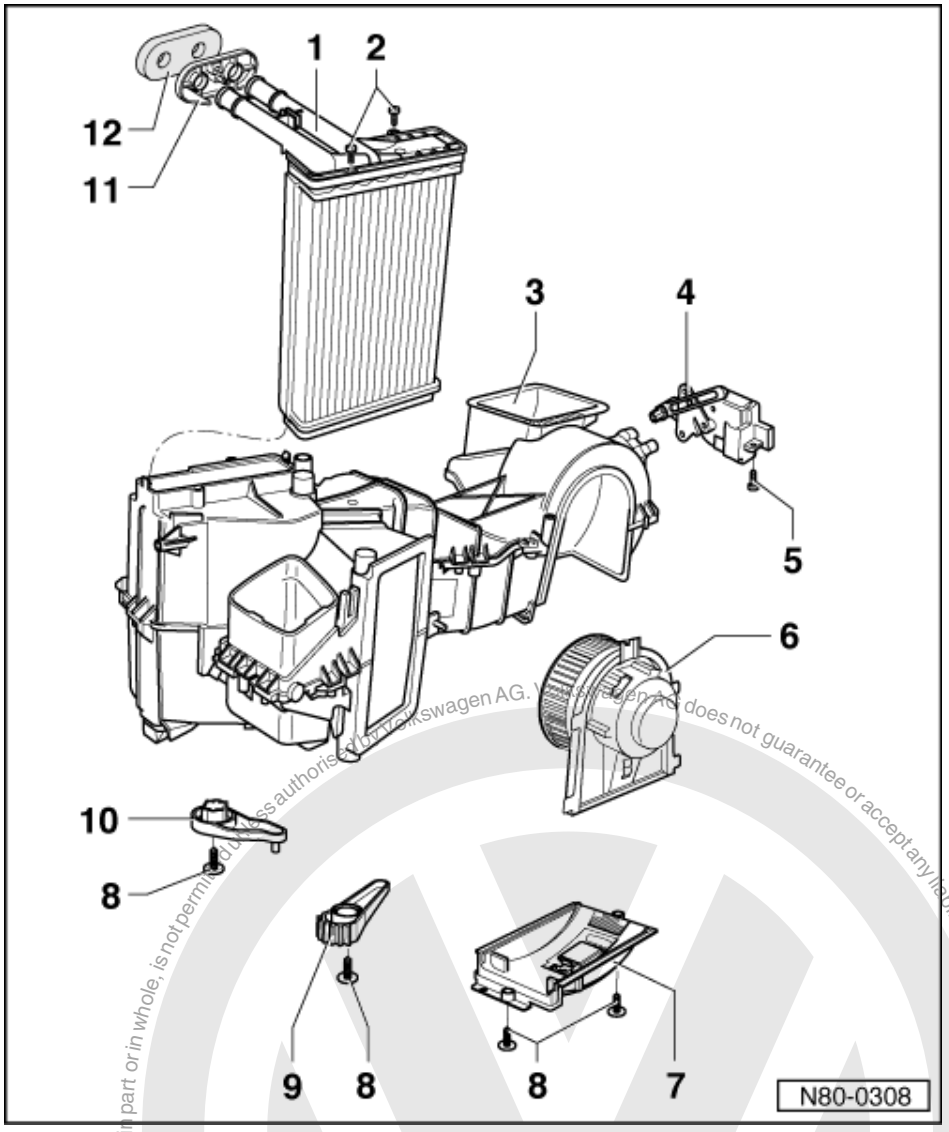

1 Heat exchanger
- Draincoolant
- Renewing: Remove dash panel and heater unit
- After removal renew complete coolant

2 Fillister head self-tapping screw

3 Air distribution housing
- Do not dismantle further

4 Fresh air/air recirculation positioning motor -V154-
- Installing => Page 21

5 Fillister head self-tapping screw

6 Fresh air blower -V2-
- Removing => Page 7

Protected by copyright. Copyright by Volkswagen AG.
Volkswagen AG does not guarantee or accept any liability with respect to the correctness of information in this document.
satelettronica

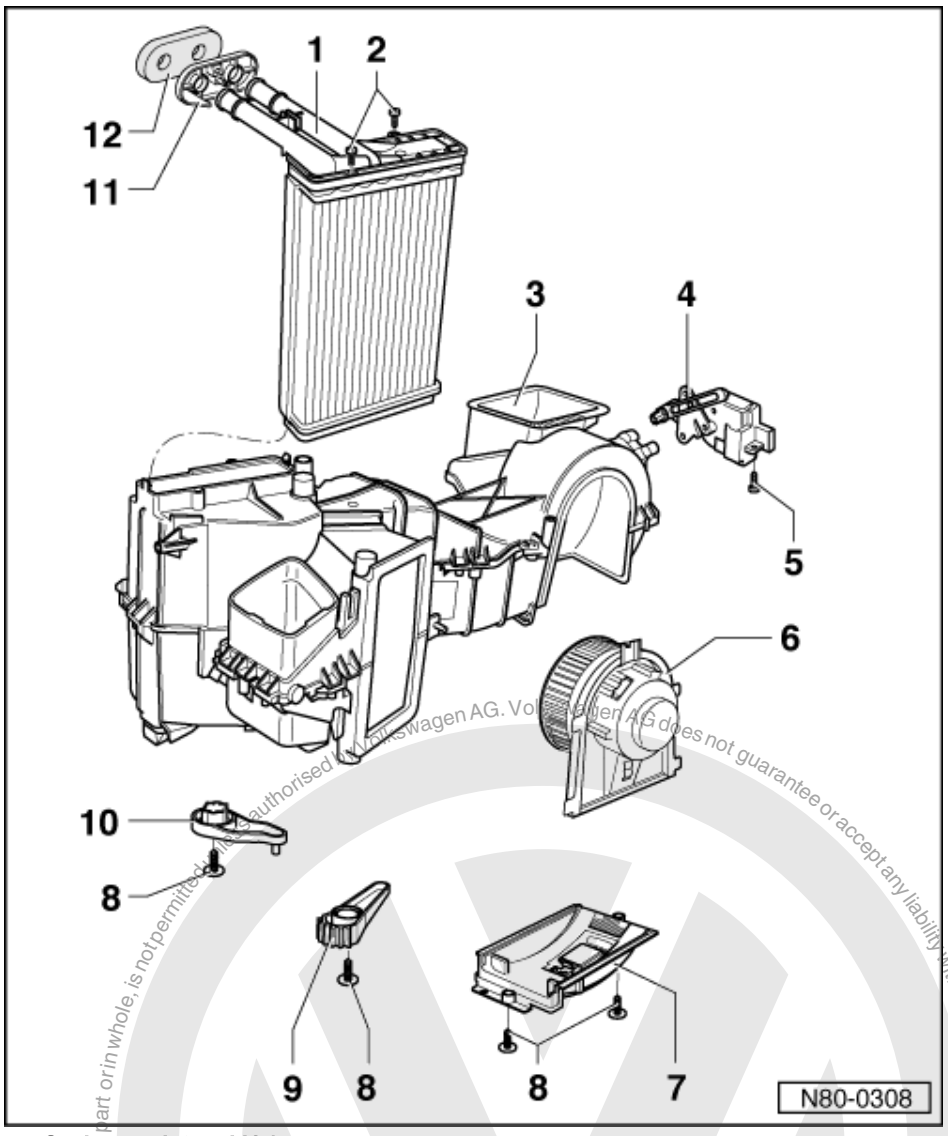

7 Series resistor -N24-
- Removing =>Page 7 , Removing and installing fresh air blower -V2-

8 Fillister head self-tapping screw

9 Central flap lever
- Installing and adjusting => Fig. 1

10 Temperature flap lever
- Note correct part number

11 Base plate

12 Heat exchanger/bulkhead seal
- Note installation position
  => Fig. 2

Protected by copyright. Copyright by Volkswagen AG.
Copyright by Volkswagen AG. Volkswagen AG does not guarantee or accept any liability with respect to the correctness of information in this document.
Copying for private or commercial purposes, in part or in whole, is not permitted unless authorised by Volkswagen AG.
satelettronica

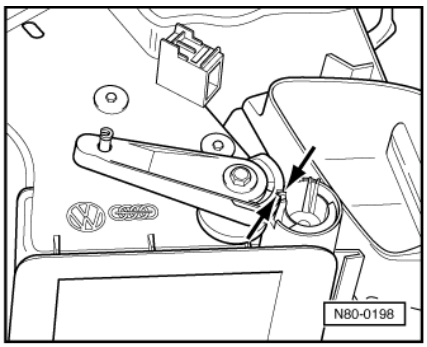

-> Fig.1 Installing and adjusting lever for central flap

- The central flap pinion has an adjustment marking. Fit the lever so that the lever marking and the pinion marking align with one another -arrows-.

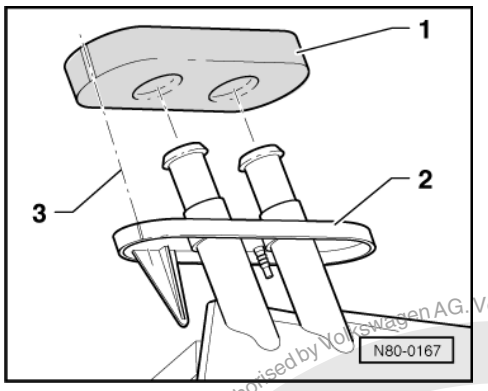

-> Fig.2 Installation position of heat exchanger seal/bulkhead

The seal between the heat exchanger and the bulkhead has a fitting mark.

Fit the seal -1- so that the fitting mark on the seal and the mark on the base plate -2- align with one another -3-.

Installing fresh/recirculating air flap positioning motor -V154-

First carry out the following work:

- Remove dash panel.

- Remove heater unit partially and pull to side rearwards.

Notes:

- A new positioning motor is supplied in the end position "recirculation".
- The positioning motor is easier to install in the middle position.

To put the positioning motor in the middle position, proceed as follows:

- Connect voltage supply connector to positioning motor.
- Switch on ignition.

- Operate push button for fresh air/recirculating air.

Protected by copyright. Copyright by Volkswagen AG.
Copyright by Volkswagen AG. Volkswagen AG does not guarantee or accept any liability with respect to the correctness of information in this document.
Copy for private or commercial purposes, in part or in whole, is not permitted unless authorised by Volkswagen AG.
satelettronica

When the centre position has been reached

- Pull voltage supply connector off positioning motor.

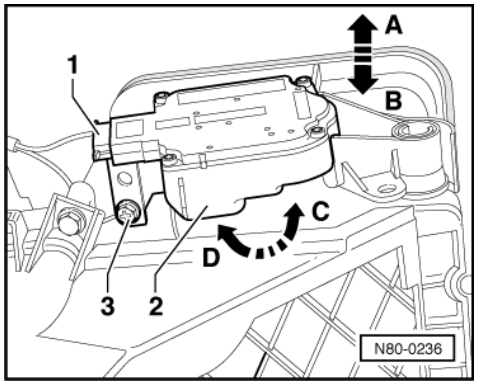

Installing

- -> Place positioning motor -2- onto the fresh air/air recirculation lever -arrow B-.

Position fresh/recirculating air flap lever manually, depending on position of positioning motor. To do this, the fresh air blower -V2- must be removed => Page 7 .

- Turn positioning motor -2- in direction of -arrow D-.
- Fit securing screws -3-.
- Connect voltage supply connector.

Protected by copyright. Copying for private or commercial purposes, in part or in whole, is not permitted unless authorised by Volkswagen AG. Volkswagen AG does not guarantee or accept any liability with respect to the correctness of information in this document. Copyright by Volkswagen AG.

satelettronica

4 - Dismantling and assembling heated air and fresh air controls

4.1 - Dismantling and assembling heated air and fresh air controls

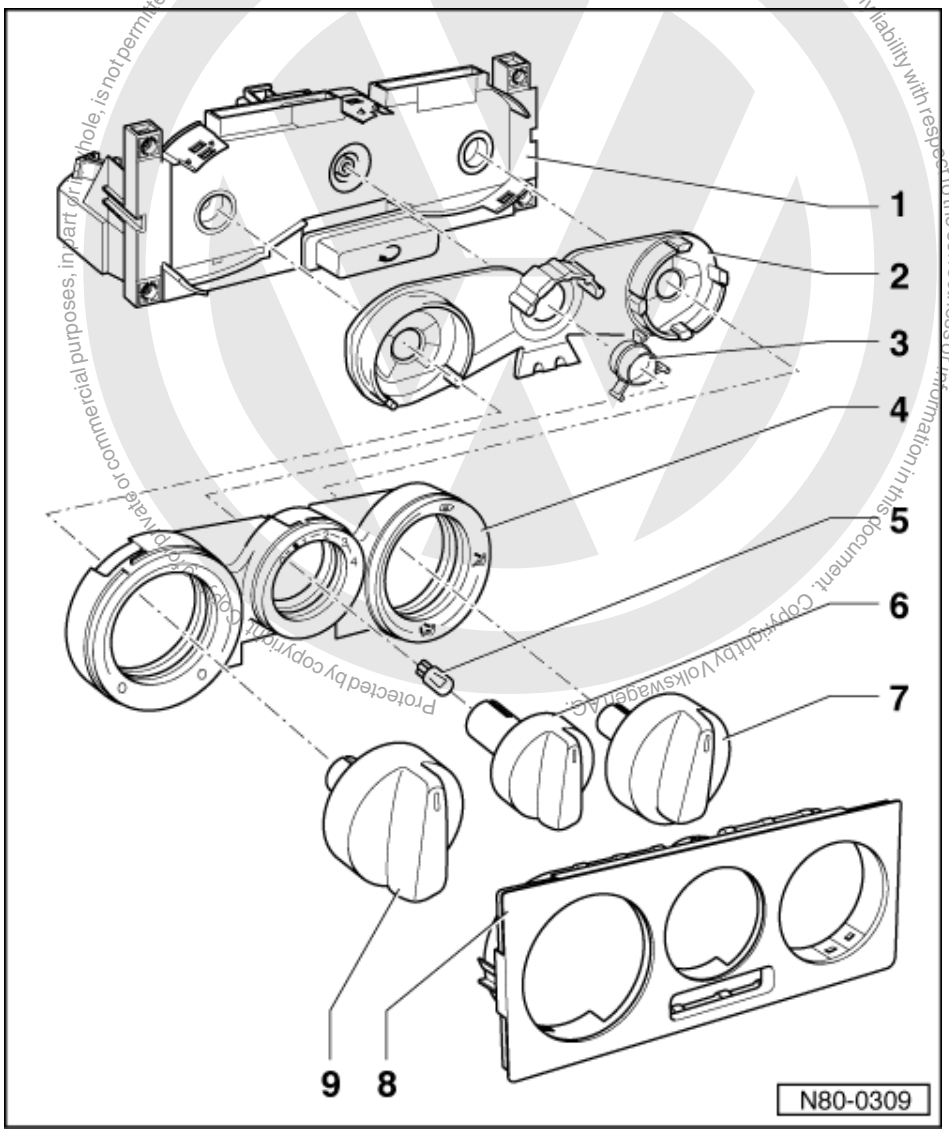

1 Controls
- Including fresh air blower switch -E9- and fresh air/air recirculation switch -E159-

2 Light conductor

3 Coloured filter

4 Trim panel

5 Fresh air control light bulb -L16-
- 12V, 1.2W
- Removing:
- Unclip trim panel -item 8 - and rotary control -item 6 -.
- Pull out bulb with aid of fuel hose.

6 Rotary control
- For blower speed
- To remove: Use pliers with suitable plastic or rubber protection for jaws

satelettronica

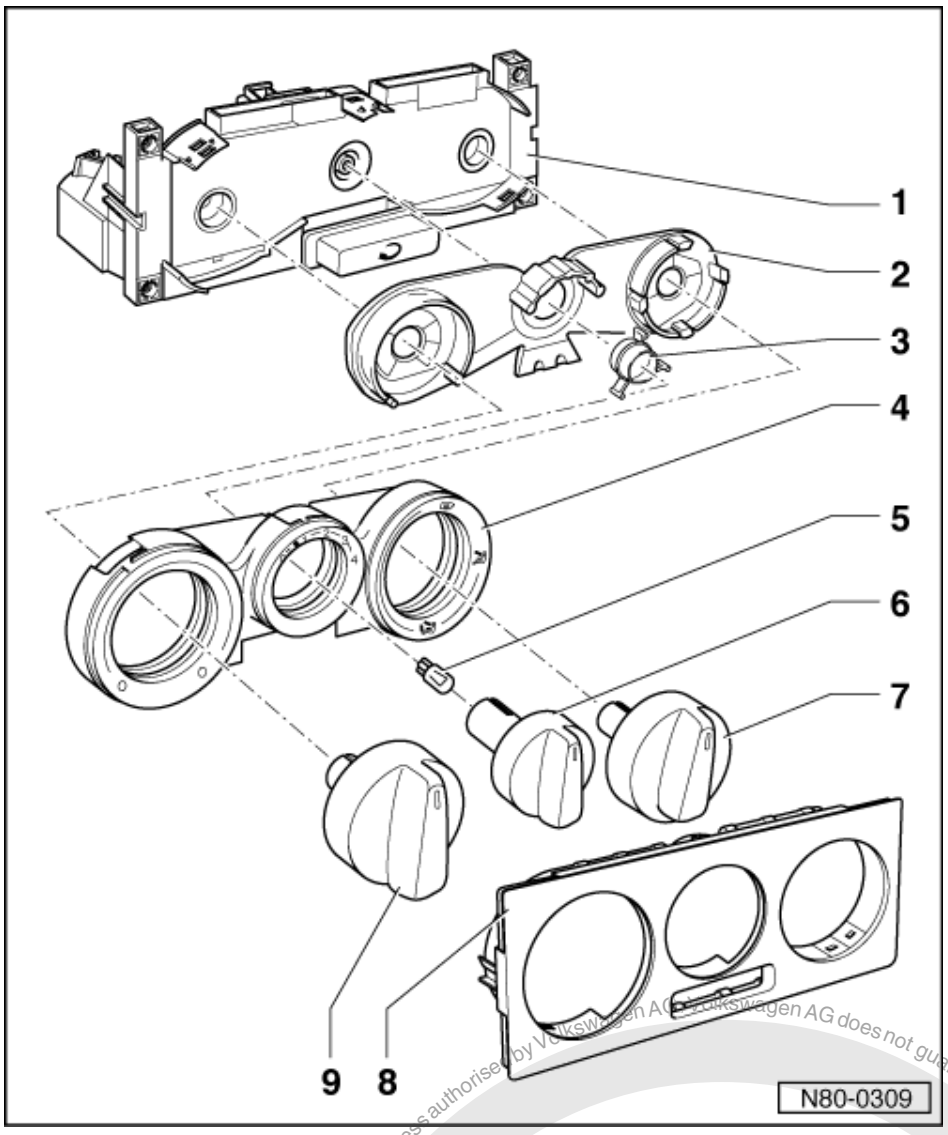

7 Rotary control
- For air distribution
- To remove: Use pliers with suitable plastic or rubber protection for jaws

8 Trim panel

9 Rotary control
- For interior temperature
- To remove: Use pliers with suitable plastic or rubber protection for jaws

satelettronica
Protected by copyright. Copying for private or commercial purposes, in part or in whole, is not permitted unless authorised by Volkswagen AG. Volkswagen AG does not guarantee or accept any liability with respect to the correctness of information in this document. Copyright by Volkswagen AG.

5 - Installing and adjusting cables

5.1 - Installing and adjusting cables

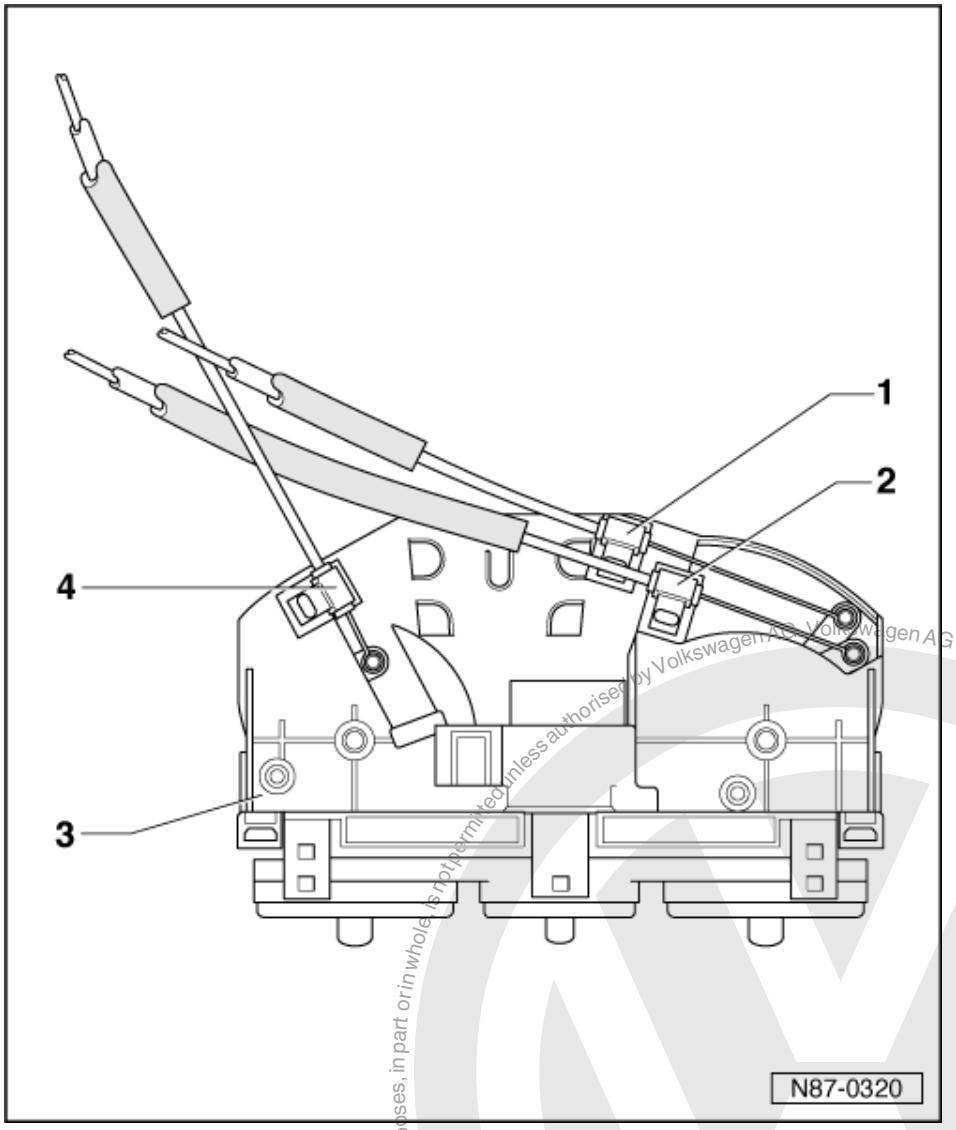

Notes:

- Attach cables to removed controls first and then attach cables to heater levers.
- The outer cables are colour coded.
- Check cables before installing, replace tight or damaged cables.
- When turning control knobs all flaps must be heard to contact the stops.

Protected by copyright. Copying for private or commercial purposes, in part or in whole, is not permitted unless authorised by Volkswagen AG. Volkswagen AG does not guarantee or accept any liability with respect to the correctness of information in this document. Copyright by Volkswagen AG.
satelettronica

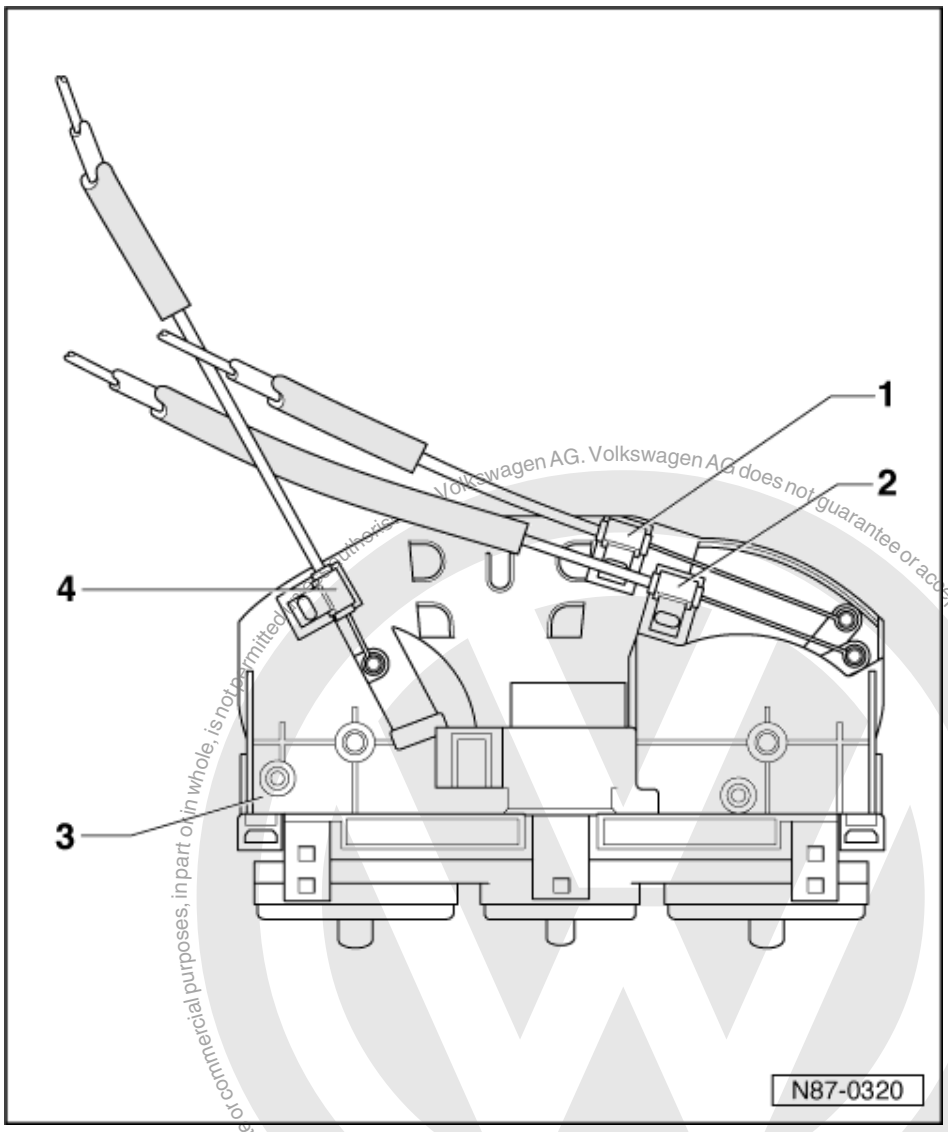

1 Central flap cable
- From air distribution rotary control to central flap
- Cable sleeve marking:
  Left-hand drive: yellow
  Right-hand drive: grey
- Adjusting cable at central flap => Fig. 3

2 Footwell/defrost flap cable
- From air distribution rotary control to footwell/defrost flap
- Cable sleeve marking:
  Left-hand drive: green
  Right-hand drive: black
- Adjusting cable at footwell/defrost flap => Fig. 2

Volkswagen AG. Volkswagen AG does not guarantee or accept any liability with respect to the correctness of information in this document. Copyright by Volkswagen AG.
Protected by copyright. Copying for private or commercial purposes, in part or in whole, is not permitted unless authorised
satelettronica

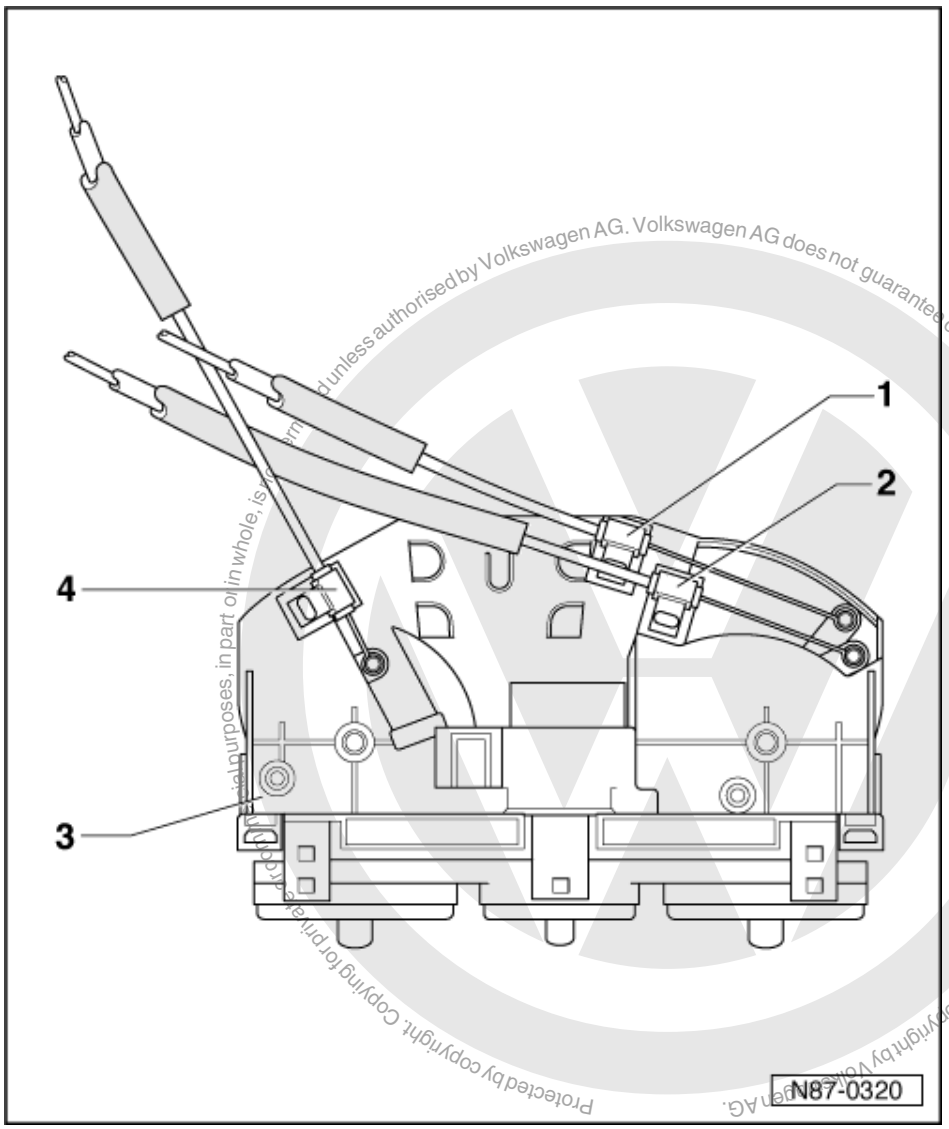

Protected by copyright. Copying for private or commercial purposes, in part or in whole, is not permitted unless authorised by Volkswagen AG. Volkswagen AG does not guarantee or accept any liability with respect to the correctness of information in this document. Copyright by Volkswagen AG.

3 Fresh air and heated air controls

- Removing and installing => Page 13

4 Temperature flap cable

- From temperature rotary control to temperature flap
- Cable sleeve retainer marking:
  Left-hand drive: beige
  Right-hand drive: white
- Adjusting cable at temperature control flap => Fig. 1

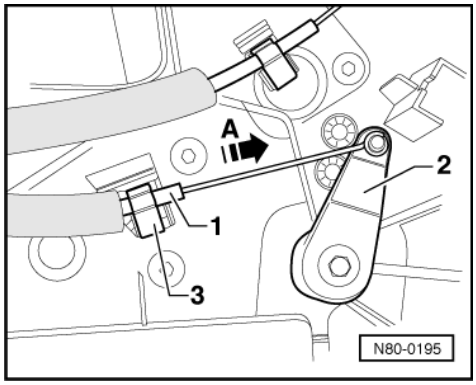

satelettronica

-> Fig.1 Adjusting cable at temperature flap

Prerequisites:

- The heated air and fresh air blower controls are installed.

Adjusting

- Turn temperature rotary control knob to left onto stop.
- Attach centre wire of cable -1- to the temperature flap lever -2-.
- Push temperature flap lever -2- onto stop -arrow A- and secure outer cable -1- with clip -3-.
- Turn temperature rotary control knob to left and right onto stops.

When turning, both flap end stops mustbe reached.

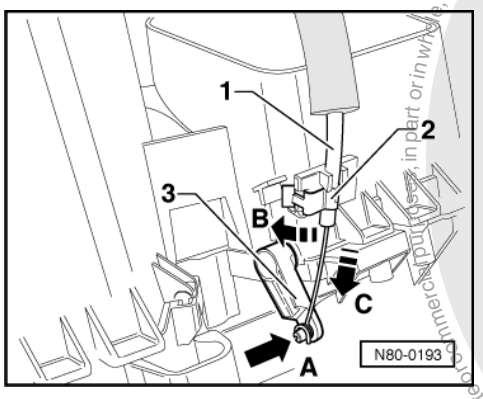

-> Fig.2 Adjusting cable at footwell/defrost flap

Prerequisite:

- The heated air and fresh air blower controls are installed.

Adjusting

- Turn air distribution rotary knob to left onto stop.
- Attach wire end of cable -1- to footwell/defrost flap lever -3-, arrow -A-.
- Press footwell/defrost flap lever onto stop arrow -C- and attach outer cable -1- with clip -2-, arrow -B-.
- Turn air distribution rotary control knob to left and right onto stops.

When turning, both flap end stops must be reached.

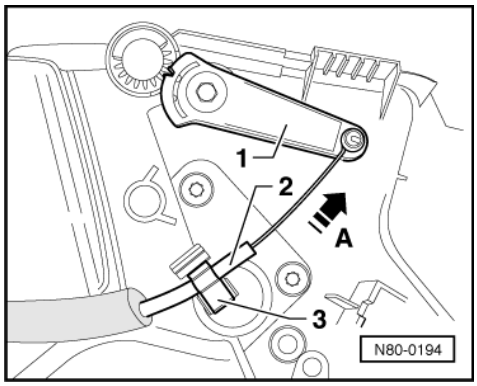

Protected by copyright. Copying for private or commercial purposes, in part or in whole, is not permitted unless authorised by Volkswagen AG. Volkswagen AG does not guarantee or accept any liability with respect to the correctness of information in this document. Copyright by Volkswagen AG.
satelettronica

-> Fig.3 Adjusting cable at central flap

Prerequisites:

- Central flap lever is correctly adjusted
  => Page 21 , Fig. 1 .
- Heated air and fresh air blower controls are installed.

Adjusting

- Turn air distribution rotary control knob to left onto stop.
- Attach centre wire of cable -2- to the central flap lever -1- .
- Press centre flap lever onto stop arrow -A- and attach outer cable -2- with clip -3-.
- Turn air distribution rotary control knob to left and right onto stops.

When turning, both flap end stops must be reached.

Protected by copyright. Copying for private or commercial purposes, in part or in whole, is not permitted unless authorised by Volkswagen AG. Volkswagen AG does not guarantee or accept any liability with respect to the correctness of information in this document. Copyright by Volkswagen AG.

satelettronica

87 - Air conditioning

1 - Notes on repair work to vehicles with air conditioning and on handling refrigerant

1.1 - Notes on repair work to vehicles with air conditioning and on handling refrigerant

The assemblies and pipe work system of the air conditioner are filled with refrigerant R134a (tetrafluoroethane, CF3-CH2F or CH2F-CF3).

At present the R134a refrigerant pressure vessels are labelled with the following trade names:

- H-FKW 134a
- SUVA 134a
- ARCTON 134a

These trade names may vary from country to country.

Further information:

- The appropriate fault finding programme can be found in, Fault finding "Heating, Air conditioner - binder 2".
- The valid current flow diagrams can be found in, Current flow diagrams, Electrical fault finding and Fitting locations binder.
- Servicing evacuated refrigerant circuit, which may only be performed by trained personnel at specialist repair workshops =>Page 68 .

Warning! Before working on the electrical system disconnect the battery earth strap.

Notes:

- When reconnecting the battery check the vehicle equipment (radio, clock, electric windows) according to Workshop Manual and/or Owner's Manual.
- A notice on the lock carrier plate in the engine compartment provides information concerning the refrigerant used and the capacity.

1.2 - Safety precautions when working on vehicles with air conditioning and when handling refrigerant R134a

The following safety precautions must be observed for the refrigerant (in some countries additional regulations may apply):

If it is necessary to evacuate the refrigerant circuit during repairs to the vehicle, the vehicle must be taken to a specialist workshop!

Reason:

Only specialist workshops are equipped with suitable service stations and trained personnel to evacuate the refrigerant competently.

Notes:

- It is recommended that an eye wash bottle be kept nearby. Should liquid refrigerant contact the eyes, eyes must be thoroughly rinsed with water for approx. 15 minutes.
- Then apply eye drops and contact a doctor immediately, even if eyes do not hurt. The doctor must be informed that the frost bite has been caused by refrigerant R134a.

Protected by copyright. Copyright by Volkswagen AG. Volkswagen AG does not guarantee or accept any liability with respect to the correctness of information in this document. Copyright by Volkswagen AG. Not intended for commercial purposes, in part or in whole, not permitted unless authorized.
satelettronica

- If, in spite of these safety measures, refrigerant comes into contact with other body parts, these areas must also be immediately thoroughly rinsed with cold water for at least 15 minutes.

Only work on the refrigerant circuit in well ventilated rooms. The refrigerant is not to be stored in shafts or openings leading to cellars.

Reasons:

Refrigerant is odourless and colourless and heavier than air and therefore displaces oxygen. If, even after taking precautions, refrigerant escapes there is a danger of asphyxiation without advance warning in poorly ventilated rooms/pits.

Precautions:

Before working on a refrigerant circuit ensure that there are no cellar openings, pits or shafts within 5 m. Any available extraction systems to be in operation.

Do not weld, braze or soft-solder parts of the charged air conditioner.

This also applies to welding and soldering work on the vehicle when the danger exists that parts of the air conditioner will heat up. During paintwork, object temperatures in the drying oven or in its pre-heating zone must not exceed 80° C.

Reason:

High pressure is the result of heat in the system and this may lead to the pressure relief valve operating. During electrical welding invisible ultra-violet rays are produced, these penetrate hoses and breakdown the refrigerant.

Precautions:

Damaged or leaking air conditioner components are not to be repaired by soldering/welding, they must always be renewed, first evacuate refrigerant from refrigerant circuit using refrigerant evacuation station (take vehicle to specialist workshop).

Protected by copyright. Copying for private or commercial purposes, in part or in whole is not permitted unless authorised by Volkswagen AG. Volkswagen AG does not guarantee or accept any liability with respect to the correctness of information in this document. Copyright by Volkswagen AG.

satelettronica

2 - Air conditioner with manual controls

2.1 - Air conditioner with manual controls

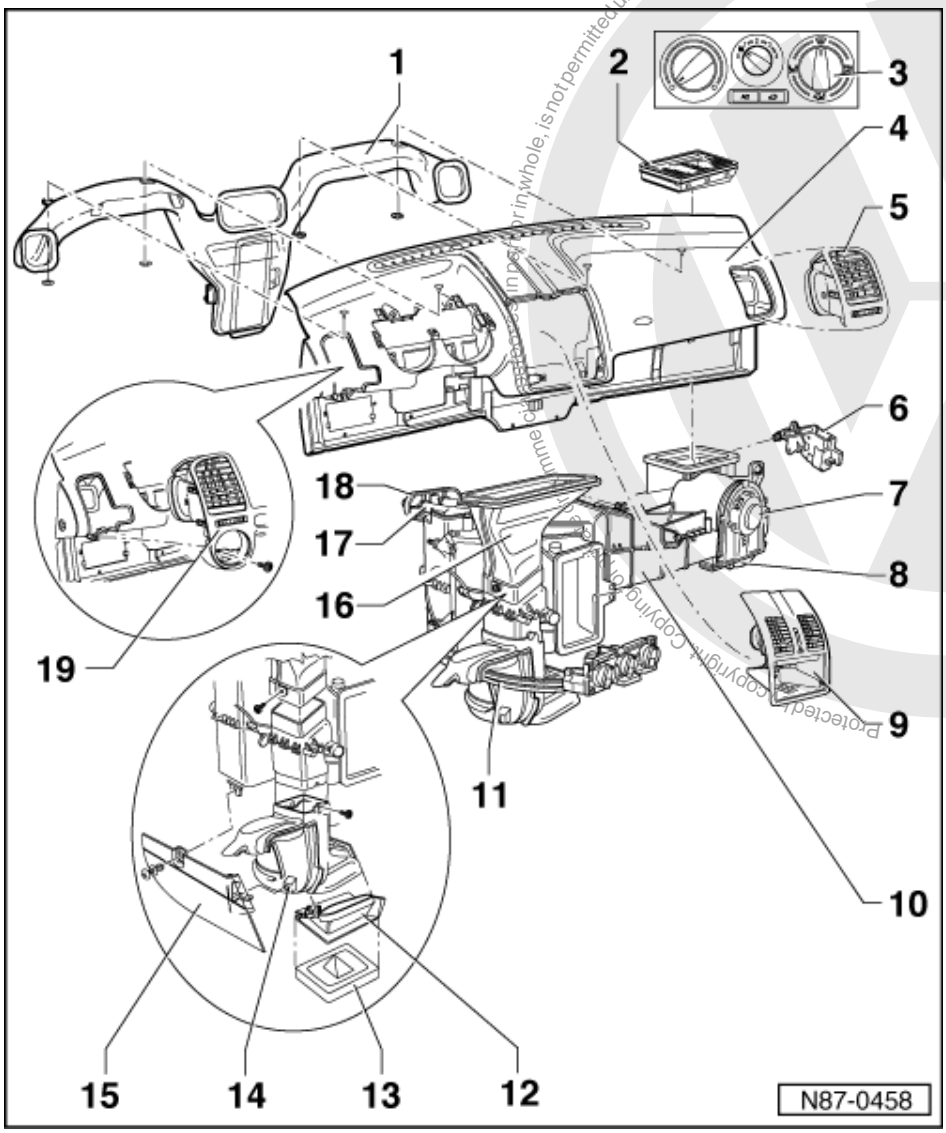

2.2 - Air conditioning and heating - Passenger compartment

Warning!
Always disconnect the battery earth strap before working on the electrical system.

Notes:

- Obtain radio anti-theft coding before disconnecting the battery.
- Check vehicle equipment (radio, clock, electric windows) as per Workshop Manual and/or Owner's Manual when reconnecting the battery.

Protected by copyright. Copyright by Volkswagen AG. Volkswagen AG does not guarantee or accept any liability with respect to the correctness of information in this document. Copyright by Volkswagen AG.
satelettronica

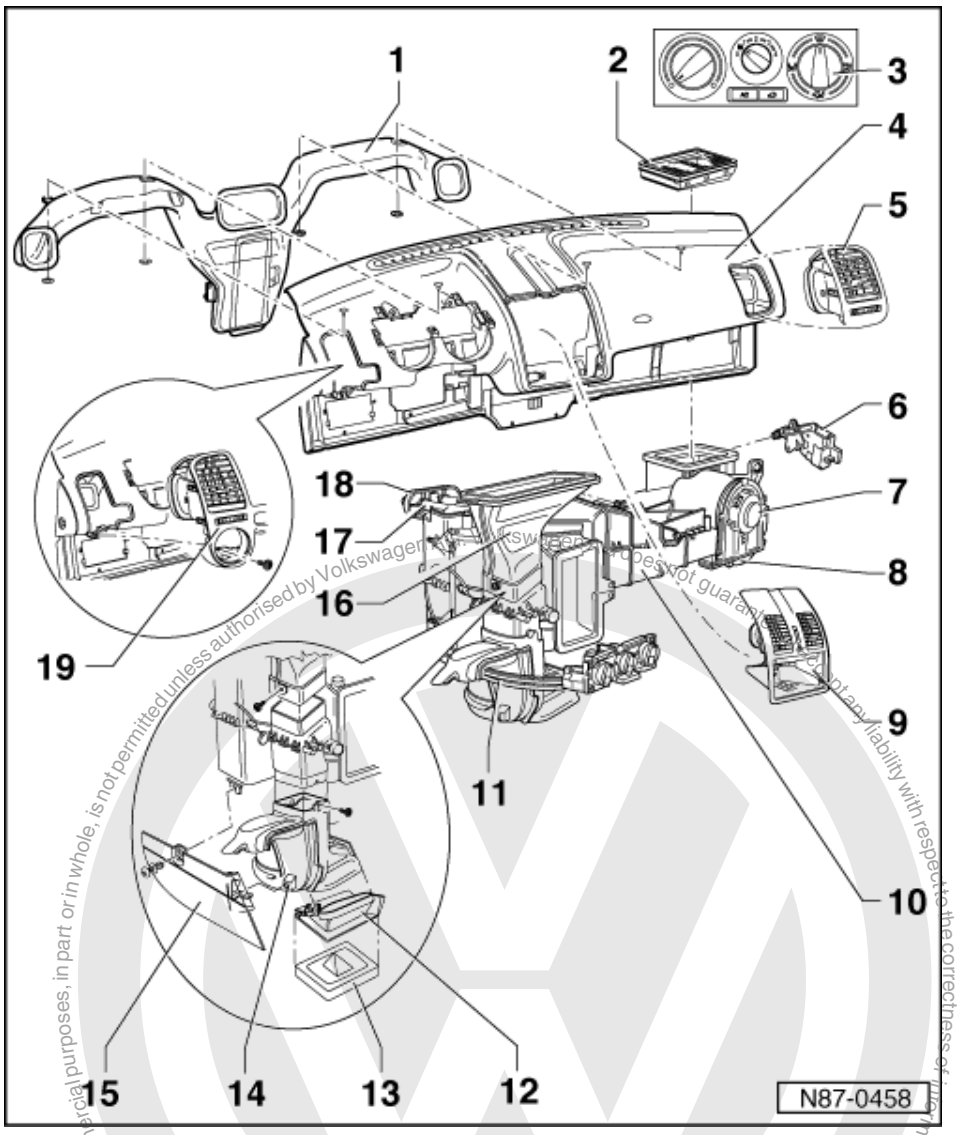

- Components marked with an * can only be repaired in specialist workshops, this is because the refrigerant must first be extracted with service station V.A.G 1885.

1 Air duct

2 Dust and pollen filter
- In plenum chamber
- With activated charcoal filter
- Removing and installing
  => Page 7

3 Heating and air conditioning controls
- With installed air conditioner switch -E35-
- With fresh air blower switch -E9-
- With fresh and recirculated air flap switch -E159-
- Removing and installing =>Page 37
- Dismantling and assembling => Page 40

satelettronica

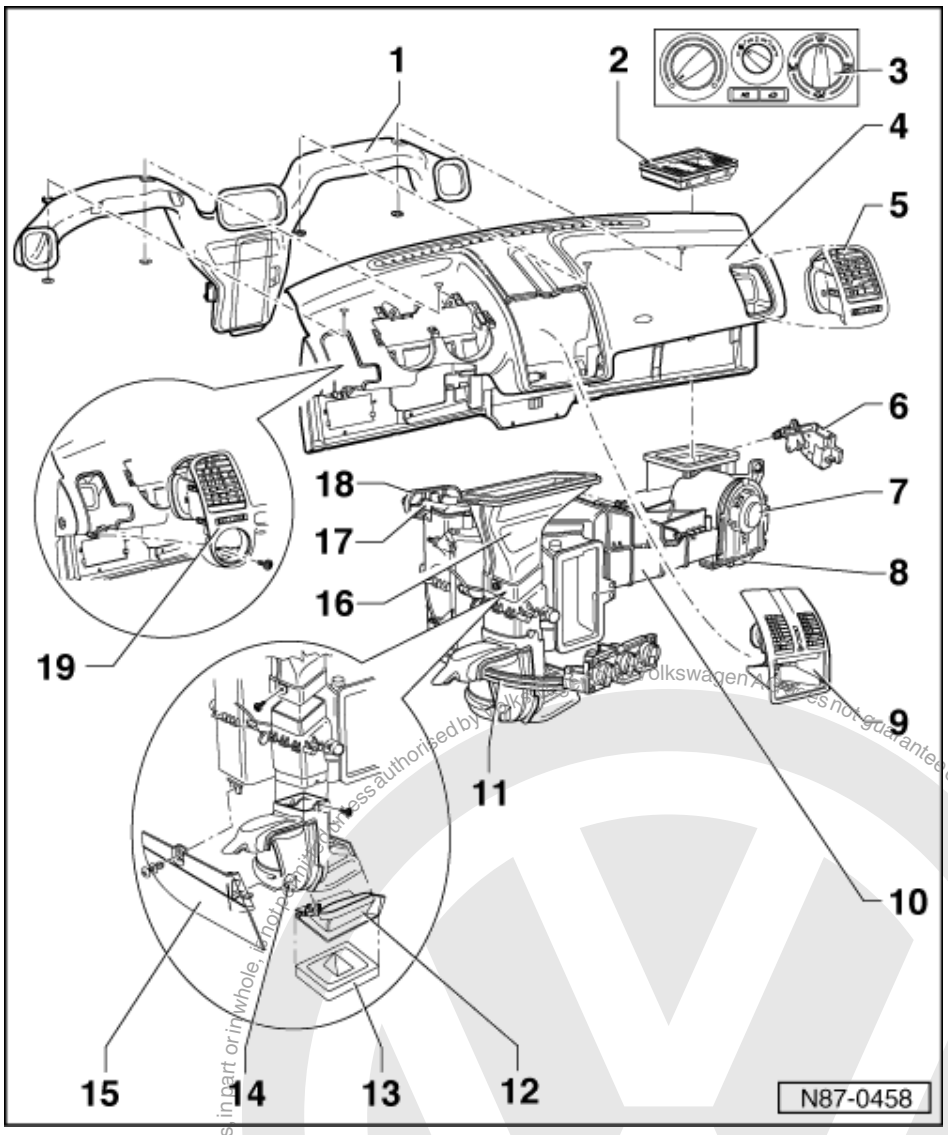

4 Dash panel
- Removing and installing

=> General body repairs, interior; Repair Group 70; Removing and installing dash panel Removing and installing dash panel

5 Front passenger's vent
- Removing vent => Page 9

6 Fresh air/air recirculation positioning motor -V154-
- Installing => Page 21

7 Fresh air blower -V2-
- Removing => Fig. 1

8 Fresh air blower series resistor with overheating fuse -N24-
- Removing =>Fig. 1 , Removing and installing fresh air blower -V2-

9 Central vent
- Removing vent => Page 9

satelettronica

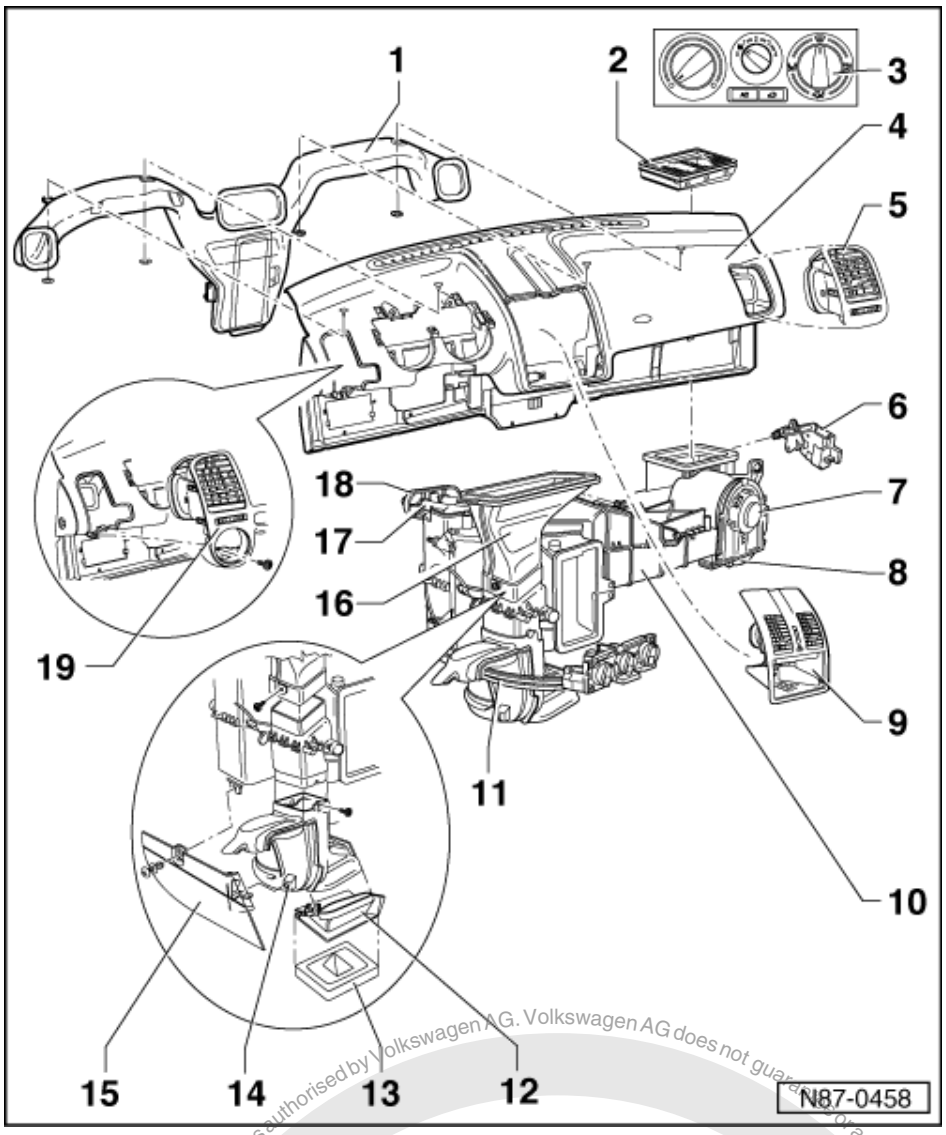

10 Heating and air conditioning*
- Removing => Page 85
- Dismantling and assembling evaporator housing => Page 88

11 Cables
- Installing and adjusting => Page 42

12 Connecting piece

13 Cover

14 Footwell vent
- Removing vent => Page 9

15 Kick plate

16 Intermediate piece, defrost
- Renewing:
- Draincoolant
- Removing and installing dash panel

=> General body repairs, interior; Repair Group 70; Removing and installing dash panel Removing and installing dash panel

satelettronica
Protected by copyright. Copying for private or commercial purposes, in part or in whole, is not permitted unless authorised by Volkswagen AG. Volkswagen AG does not guarantee or accept any liability with respect to the correctness of information in this document. Copyright by Volkswagen AG.

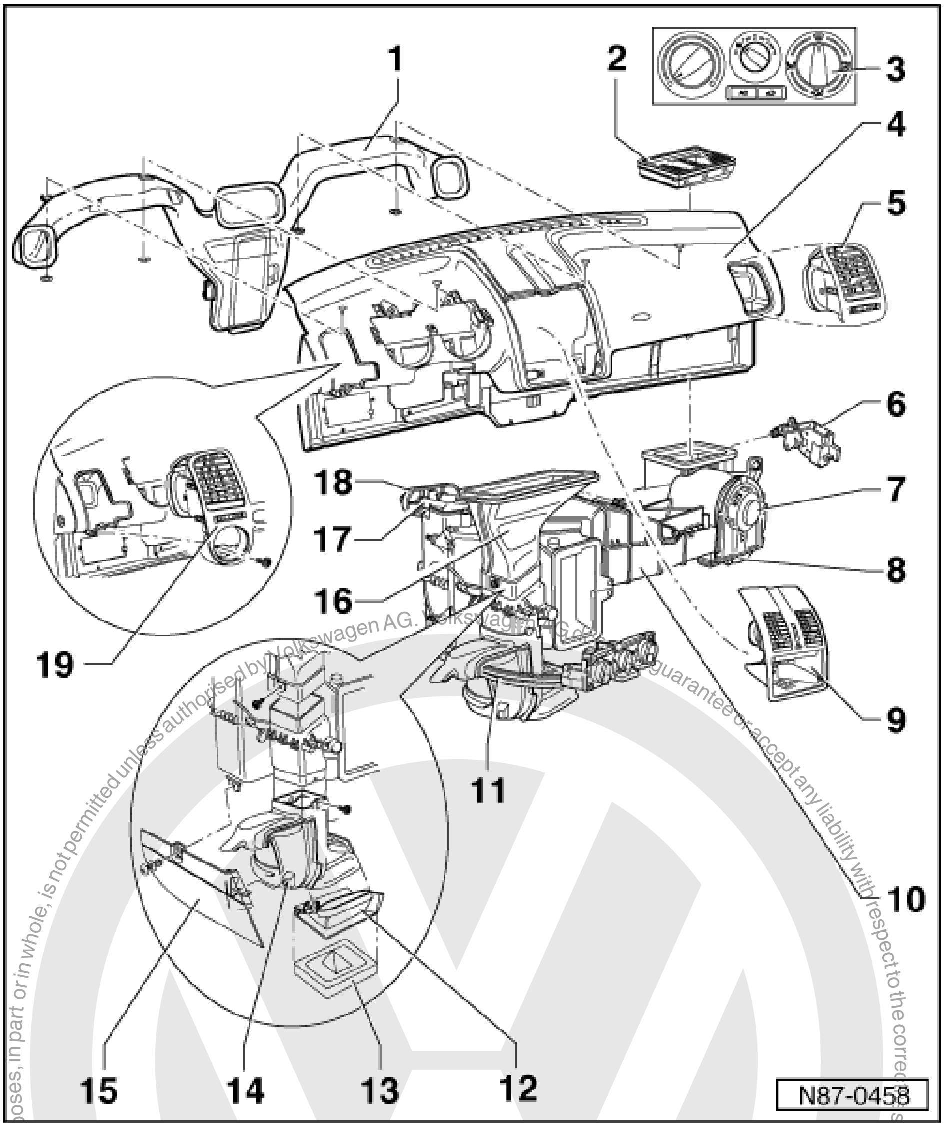

17 Heat exchanger*

- Removing => Page 88 , Dismantling and assembling evaporator housing.
- After renewal replace coolant complete

18 Heat exchanger/bulkhead seal*

- Dismantling and assembling evaporator housing => Page 88
- Note installation position
  => Page 21 , Fig. 2

19 Right vent

- Removing vent => Page 9

Protected by copyright. Copying for private or commercial purposes, in part or in whole, is not permitted unless authorised by Volkswagen AG. Volkswagen AG does not guarantee or accept any liability with respect to the correctness of information in this document. Copyright by Volkswagen AG.

satelettronica

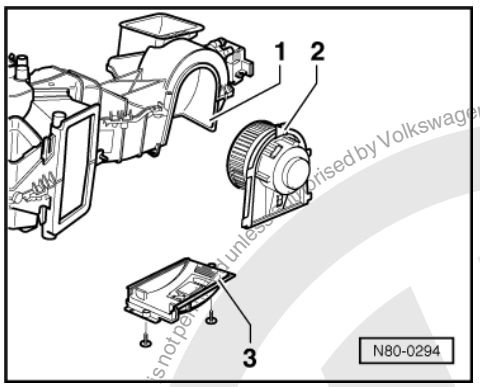

-> Fig.1 Removing fresh air blower -V2-

1 - Heater and air conditioner
2 - Fresh air blower -V2-
3 - Series resistor with overheating fuse for fresh air blower -N24-

Removing

- Remove trim under the steering column.

=> General body repairs interior; Repair group 70; Removing trim under the steering column. Removing trim under the steering column.

- Remove centre console.

=> General body repairs interior; Repair group 70; Removing and installing centre console. Removing and installing centre console.

- Remove shelf on passenger side

=> General body repairs interior; Repair group 70; Removing and installing shelf on passenger side. Removing and installing shelf on passenger side.

- Pull connector off series resistor.
- Remove fresh air blower series resistor -item 5-.
- Pull fresh air blower out downwards.

2.3 - Removing and installing heating and air conditioning controls

Removing

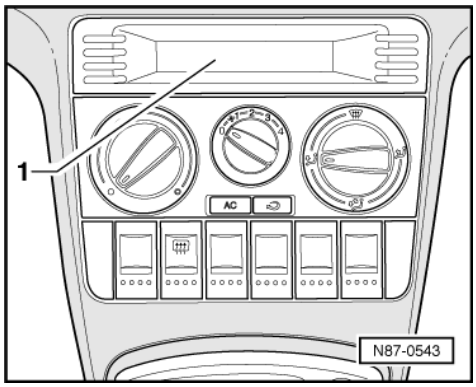

- -> Unclip tray -1- with a screwdriver.

Copyright by Volkswagen AG. Volkswagen AG does not guarantee or accept any liability with respect to the correctness of information in this document. Copyright by Volkswagen AG. Protected by copyright. Copying for private or commercial purposes, in part or in whole, is not permitted unless authorised by Volkswagen AG.
satelettronica

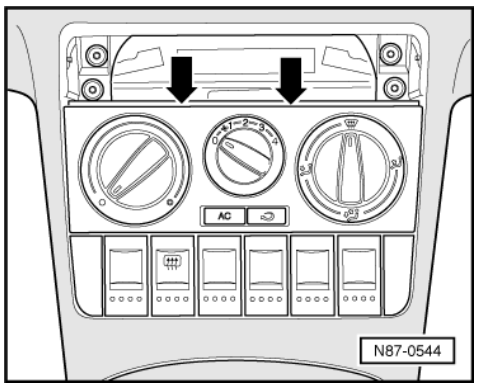

- -> Pull trim off controls -arrows-.

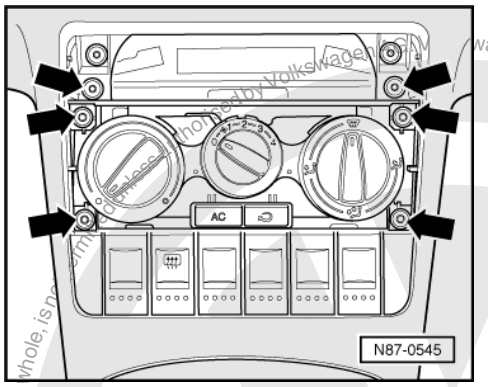

- -> Remove screws -arrows-.

First carry out the following work:

- Remove trim under the steering column.

=> General body repairs interior; Repair group 70; Removing trim under the steering column. Removing trim under the steering column.

- Remove centre console.

=> General body repairs interior; Repair group 70; Removing and installing centre console. Removing and installing centre console.

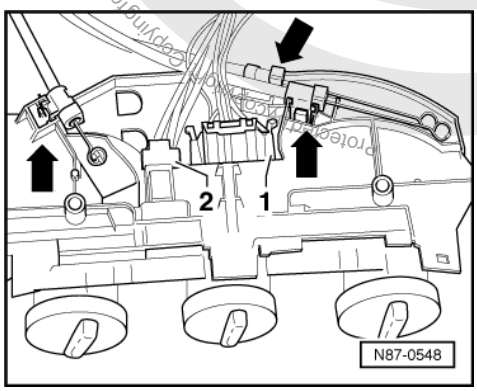

- -> Release cables on controls -arrows-.
- Pull off connectors -1- and -2-.

satelettronica

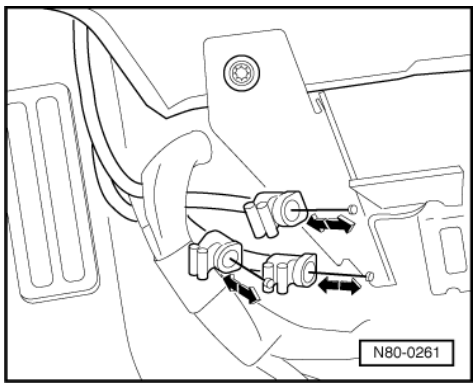

As soon as the controls have been removed check the function of the heated air and fresh air cables.

- -> To do this move the eyes of the centre cable to and fro in direction of arrow.
- Replace damaged or stiff cables.

Installing

Notes:

- Cable sleeves are colour coded.
- Check cables before installing replace tight or damaged cables.

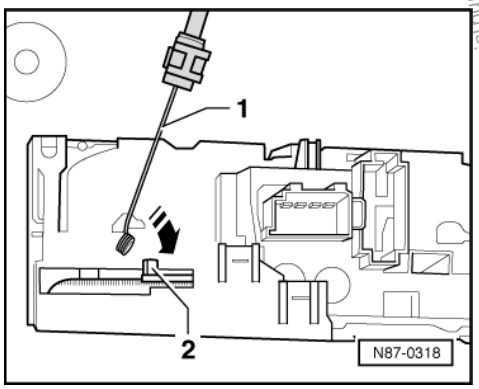

- All flaps must audibly move onto stops when turning controls.

- -> Angle wire end of cable -1- and press onto actuating arm -2- -arrow-.

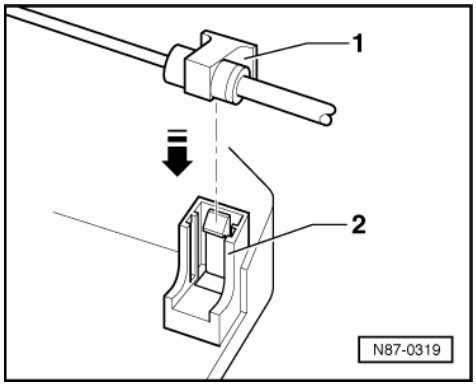

- -> Press cable for footwell/defrost, cable for temperature flap and cable for central flap -1- into locking device -2- until it engages.

Footwell/defrost flaps cable markings:
Left-hand drive: green

Protected by copyright. Copying for private or commercial purposes, in part or in whole, is not permitted unless authorised by Volkswagen AG. Volkswagen AG does not guarantee or accept any liability with respect to the correctness of information in this document. Copyright by Volkswagen AG.
satelettronica

Right-hand drive: black
Central flap cable markings:
Left-hand drive: yellow
Right-hand drive: grey
Temperature flap cable markings: red
Left-hand drive: beige
Right-hand drive: white

2.4 - Dismantling and assembling heating and air conditioning controls

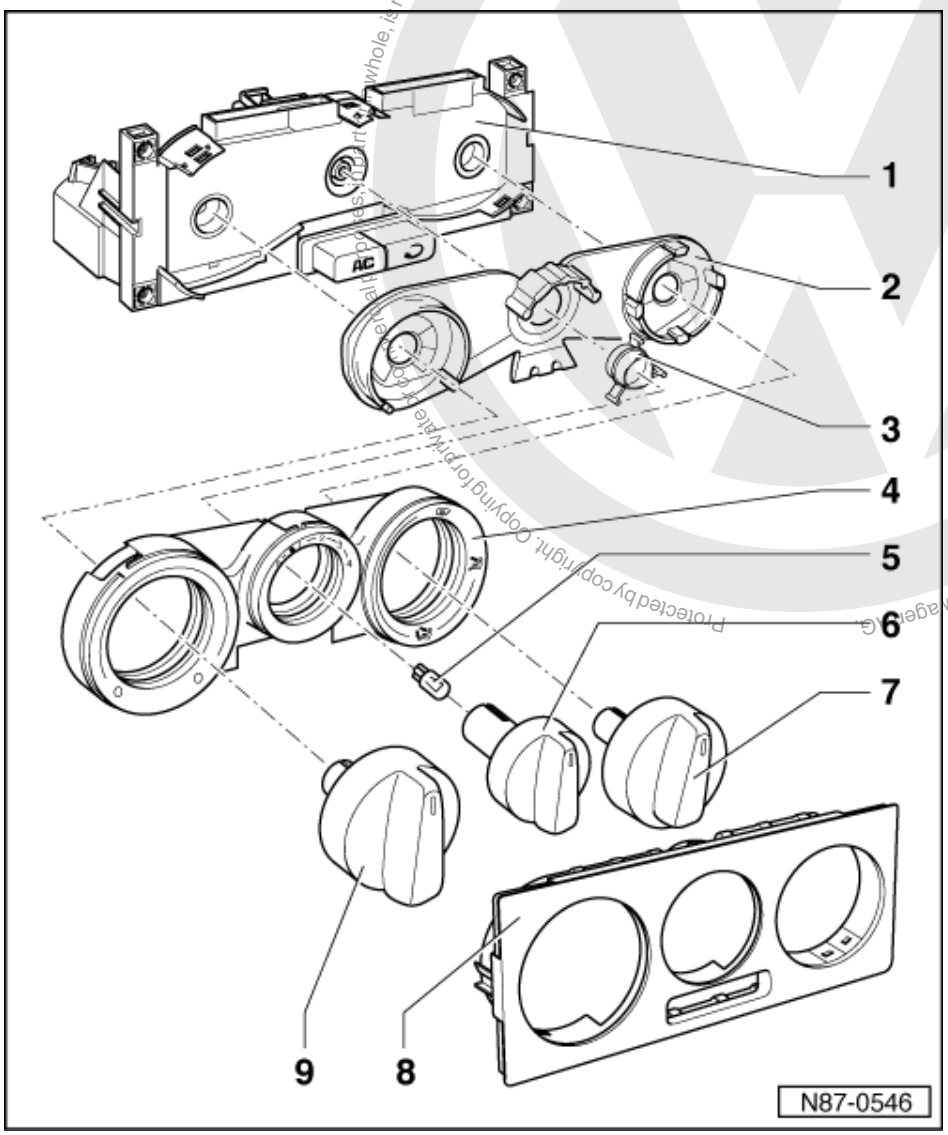

1 Heating and air conditioning controls
- With installed air conditioner switch -E35-
- With fresh air blower switch -E9-
- With switch for fresh and recirculated air flap -E159-
- Removing =>Page 37

2 Light conductor

3 Coloured filter

4 Trim panel

5 Fresh air control light bulb -L16-
- 12V, 1.2W

Protected by copyright. Copyright by Volkswagen AG. Volkswagen AG does not guarantee or accept any liability with respect to the correctness of information in this document. Copyright by Volkswagen AG. Volkswagen AG, is not permitted unless authorised by Volkswagen AG.
satelettronica

- Removing:
- Unclip trim panel -item 8 - and rotary control -item 6 -.
- Pull out bulb with aid of fuel hose.

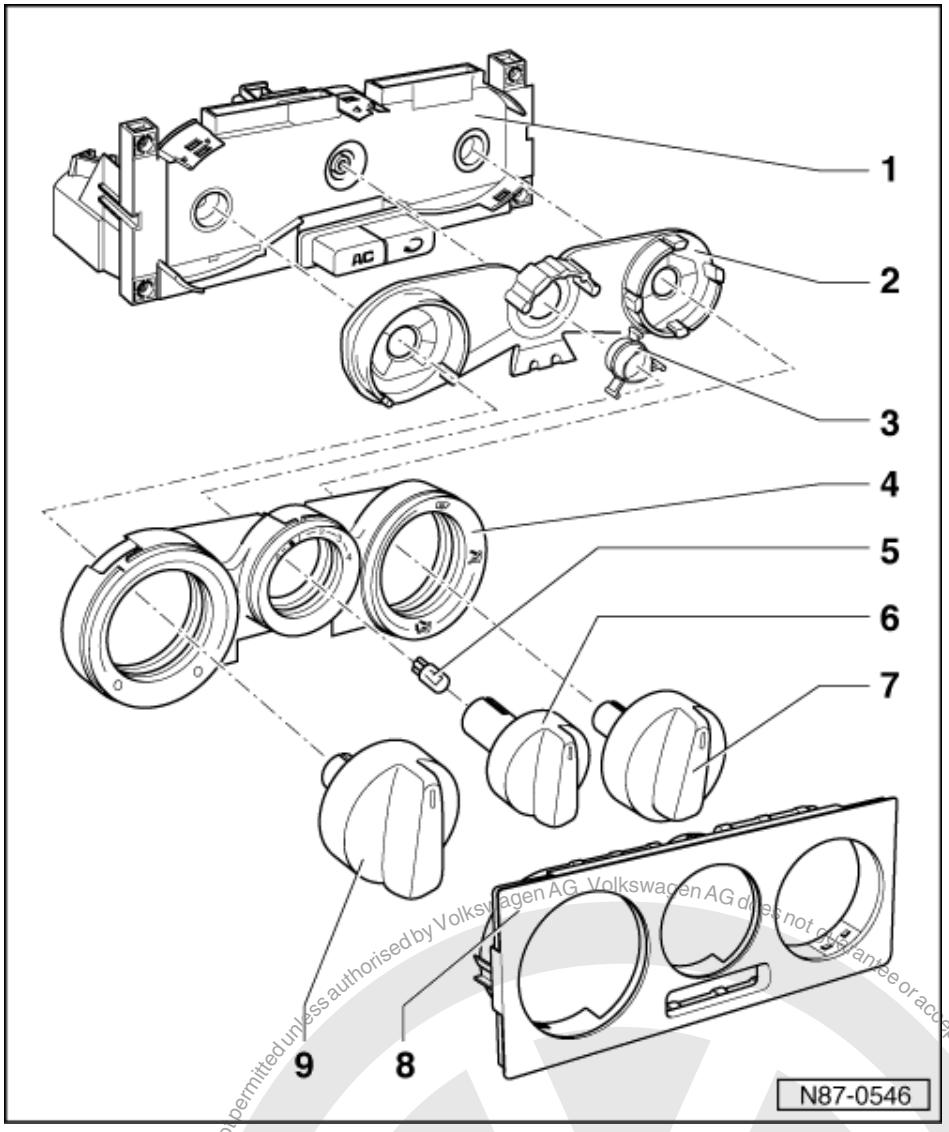

6 Rotary control
- For blower speed
- To remove: Use pliers with suitable plastic or rubber protection for jaws

7 Rotary control
- For air distribution
- To remove: Use pliers with suitable plastic or rubber protection for jaws

8 Trim panel

9 Rotary control
- For interior temperature
- To remove: Use pliers with suitable plastic or rubber protection for jaws

Protected by copyright. Copying for private or commercial purposes, in part or in whole, is not permitted unless authorised by Volkswagen AG. Volkswagen AG does not guarantee or accept any liability with respect to the correctness of information in this document. Copyright by Volkswagen AG.
satelettronica

2.5 - Installing and adjusting heating and air conditioning cables

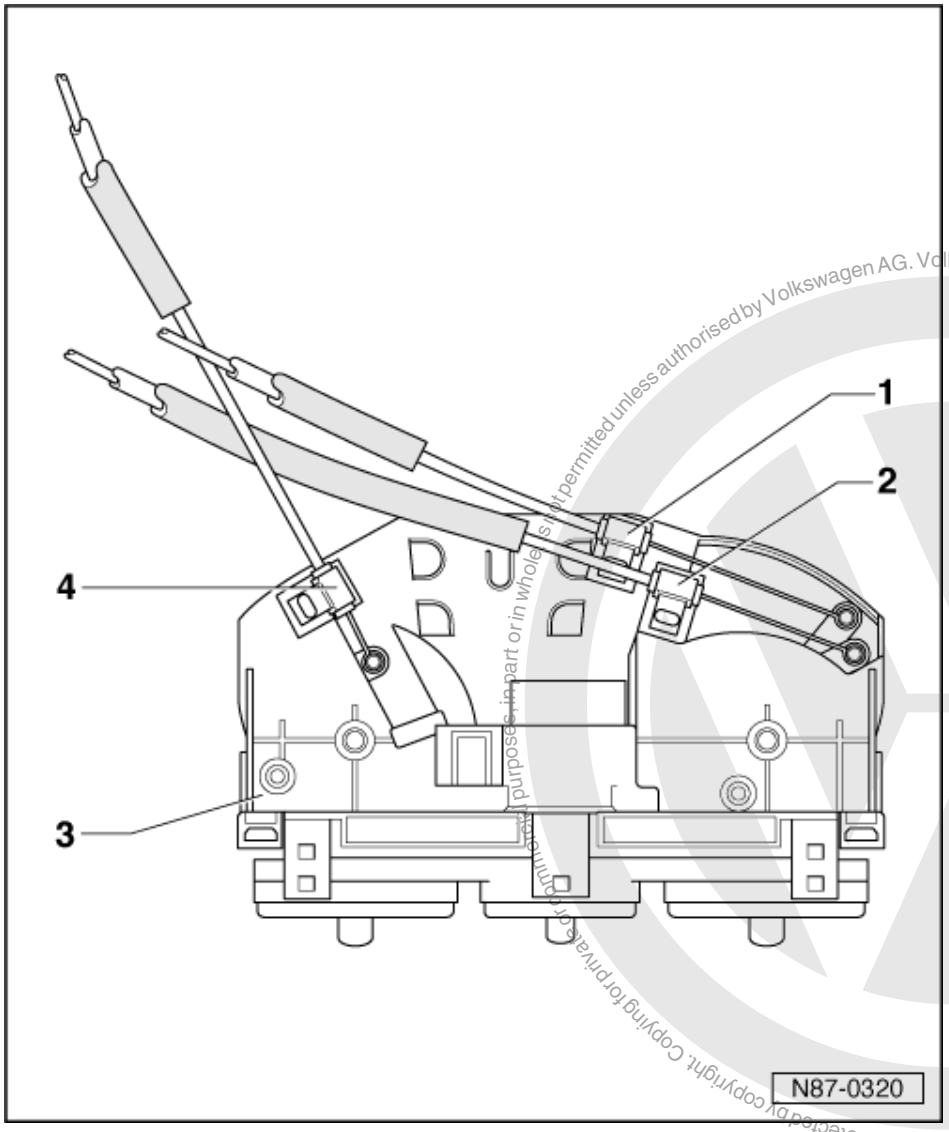

Protected by copyright. Copying for private or commercial purposes, in part or in whole is not permitted unless authorised by Volkswagen AG. Volkswagen AG does not guarantee or accept any liability with respect to the correctness of information in this document. Copyright by Volkswagen AG.
satelettronica

Notes:

- The outer cables are colour coded.
- Check cables before installing, replace tight or damaged cables.
- First connect cables to removed controls then adjust and secure cables to levers on air conditioner.
- When turning control knobs all flaps must be heard to contact the stops.

1 Central flap cable
- From air distribution rotary control to central flap
- Cable sleeve marking:
  Left-hand drive: yellow
  Right-hand drive: grey
- Adjusting cable at central flap => Fig. 3

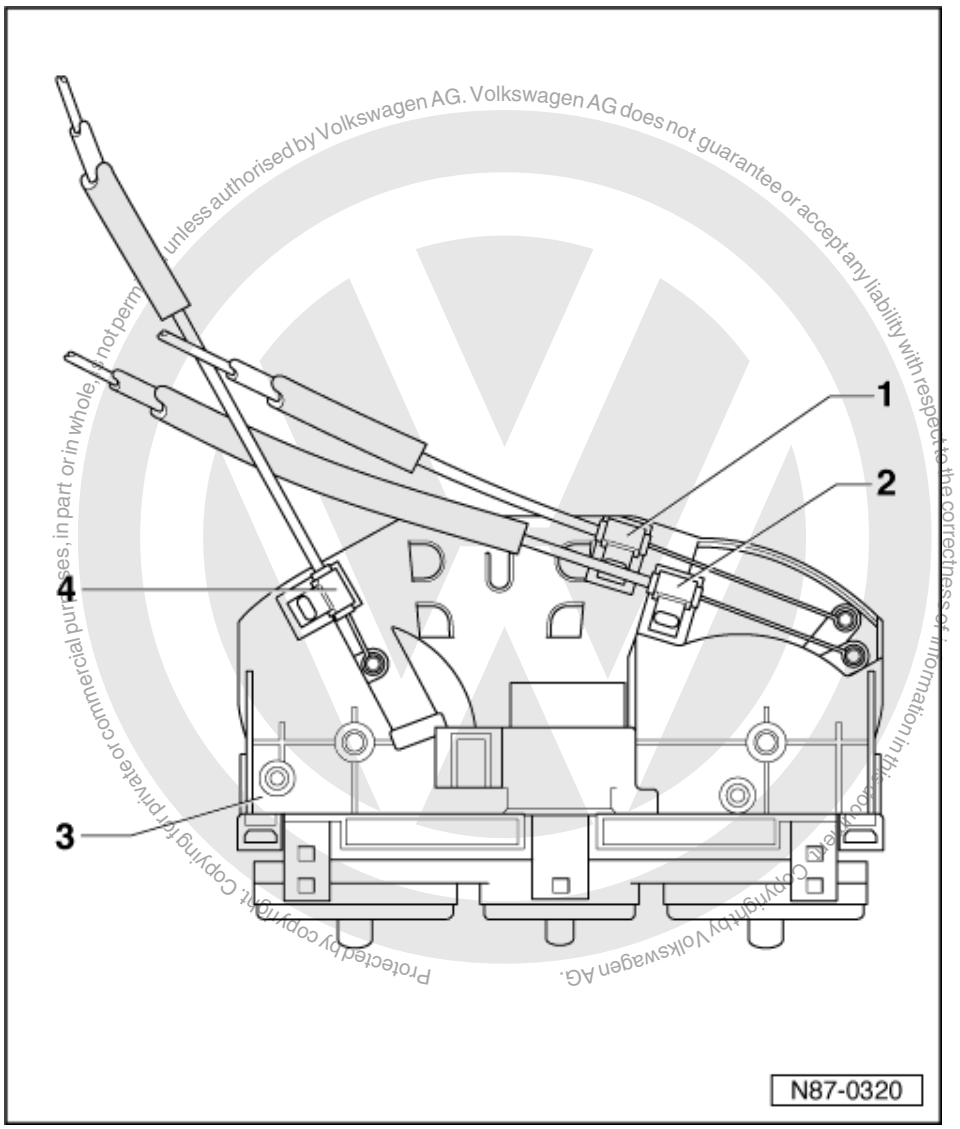

Protected by copyright. Copying for private or commercial purposes, in part or in whole, is not permitted unless authorised by Volkswagen AG. Volkswagen AG does not guarantee or accept any liability with respect to the correctness of information in this document. Copyright by Volkswagen AG.

2 Footwell/defrost flap cable

- From air distribution rotary control to footwell/defrost flap
- Cable sleeve marking:
  Left-hand drive: green
  Right-hand drive: black
- Replacing:
- Remove controls for heating and air conditioning system
  => Page 37
- Remove trim under the steering column.

=> General body repairs; Repair group 70; Removing trim under the steering column. Removing trim under the steering column.

- Unclip cable on heater and air conditioner unit.
- Adjusting cable at footwell/defrost flap => Fig. 2

satelettronica

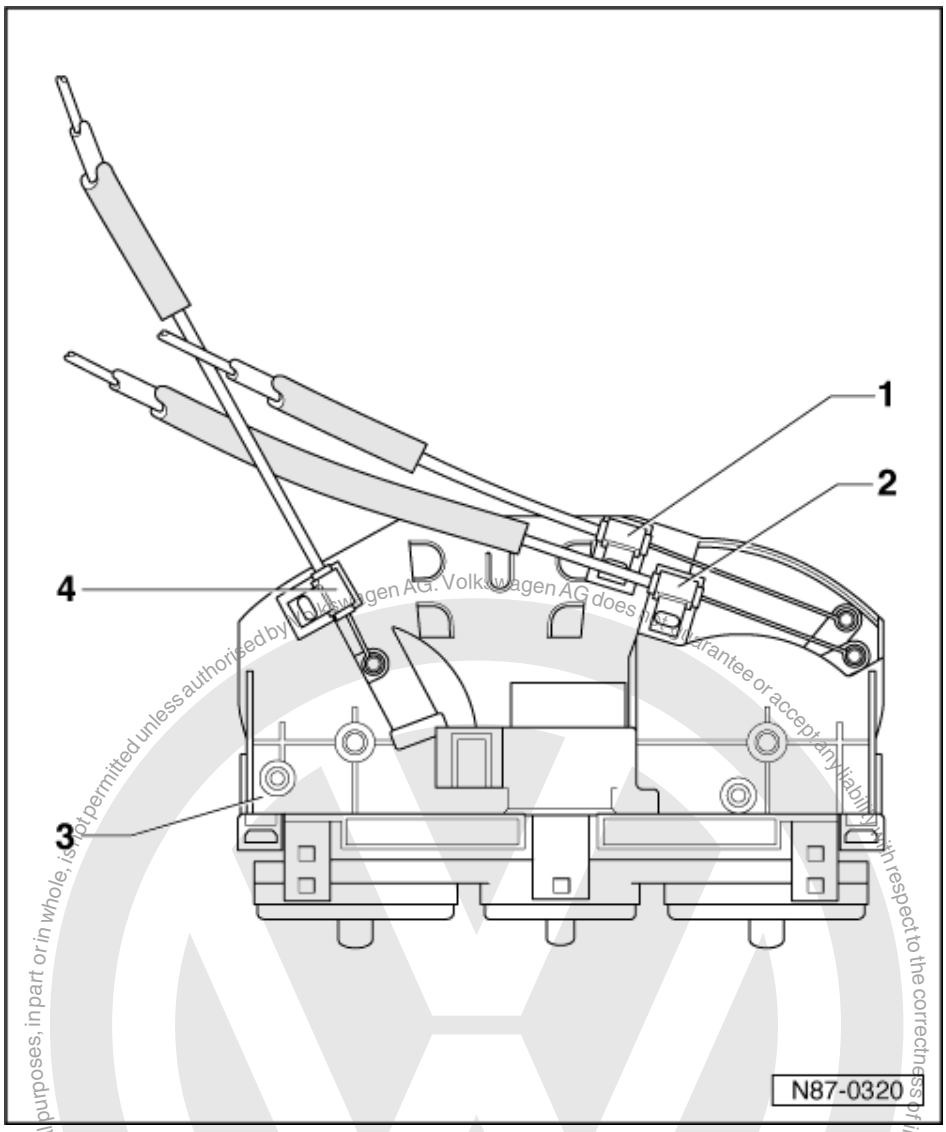

3 Heating and air conditioning controls
- Removing =>Page 37

4 Temperature flap cable
- From temperature rotary control to temperature flap
- Cable sleeve marking:
  Left-hand drive: beige
  Right-hand drive: white
- Adjusting cable at temperature flap => Fig. 1

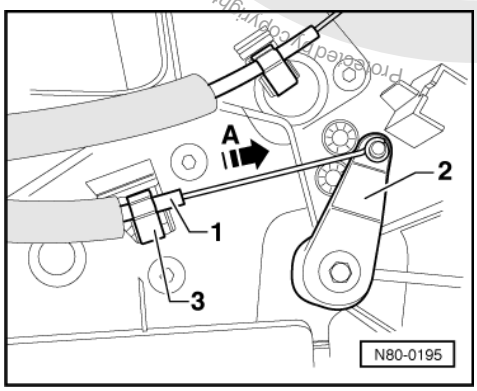

Copyright by Volkswagen AG. Volkswagen AG does not guarantee or accept any liability with respect to the correctness of information in this document. Copyright by Volkswagen AG. Protected copyright. Copying for private or commercial purposes, in part or in whole, is not permitted unless authorised by Volkswagen AG.

satelettronica

Copyright by Volkswagen AG. Volkswagen does not guarantee or accept any liability with respect to the correctness of information in this document. Copyright by Volkswagen AG. Reproduced by copyright permission of Volkswagen AG. Copyright by Volkswagen AG. Volkswagen does not guarantee or accept any liability with respect to the correctness of information in this document. Copyright by Volkswagen AG.

-> Fig.1 Adjusting cable at temperature flap

Prerequisites:

- Controls for heating and air conditioning are installed.

Adjusting

- Turn temperature rotary control knob to left onto stop.
- Attach centre wire of cable -1- to the temperature flap lever -2-.
- Push temperature flap lever -2- onto stop -arrow A- and secure outer cable -1- with clip -3-.
- Turn temperature rotary control knob to left and right onto stops.

When turning, both flap end stops must be reached.

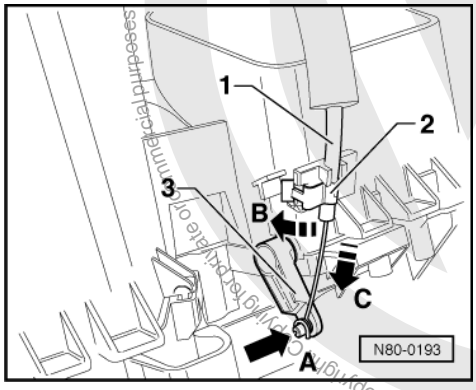

-> Fig.2 Adjusting cable at footwell/defrost flap

Prerequisite:

- Controls for heating and air conditioning are installed.

Adjusting

- Turn air distribution rotary knob to left onto stop.
- Attach wire end of cable -1- to the temperature flap lever -3-, arrow -A-.
- Press footwell/defrost flap lever onto stop arrow -C- and attach outer cable -1- with clip -2-, arrow -B-.
- Turn air distribution rotary control knob to left and right onto stops.

When turning,both flap end stops must be reached.

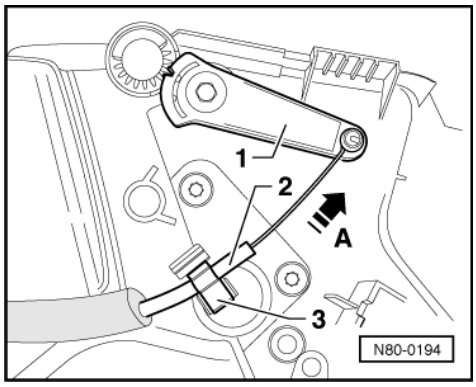

-> Fig.3 Adjusting cable at central flap

Prerequisite:

- Central flap lever is correctly adjusted
  => Page 21 .

satelettronica

- Controls for heating and air conditioning are installed.

Adjusting

- Turn air distribution rotary control knob to left onto stop.
- Attach centre wire of cable -2- to the central flap lever -1- .
- Press footwell/defrost flap lever onto stop arrow -A- and attach outer cable -2- with clip -3-.
- Turn air distribution rotary control knob to left and right onto stops.

When turning, both flap end stops must be reached.

2.6 - Air conditioning and heating system - Engine compartment

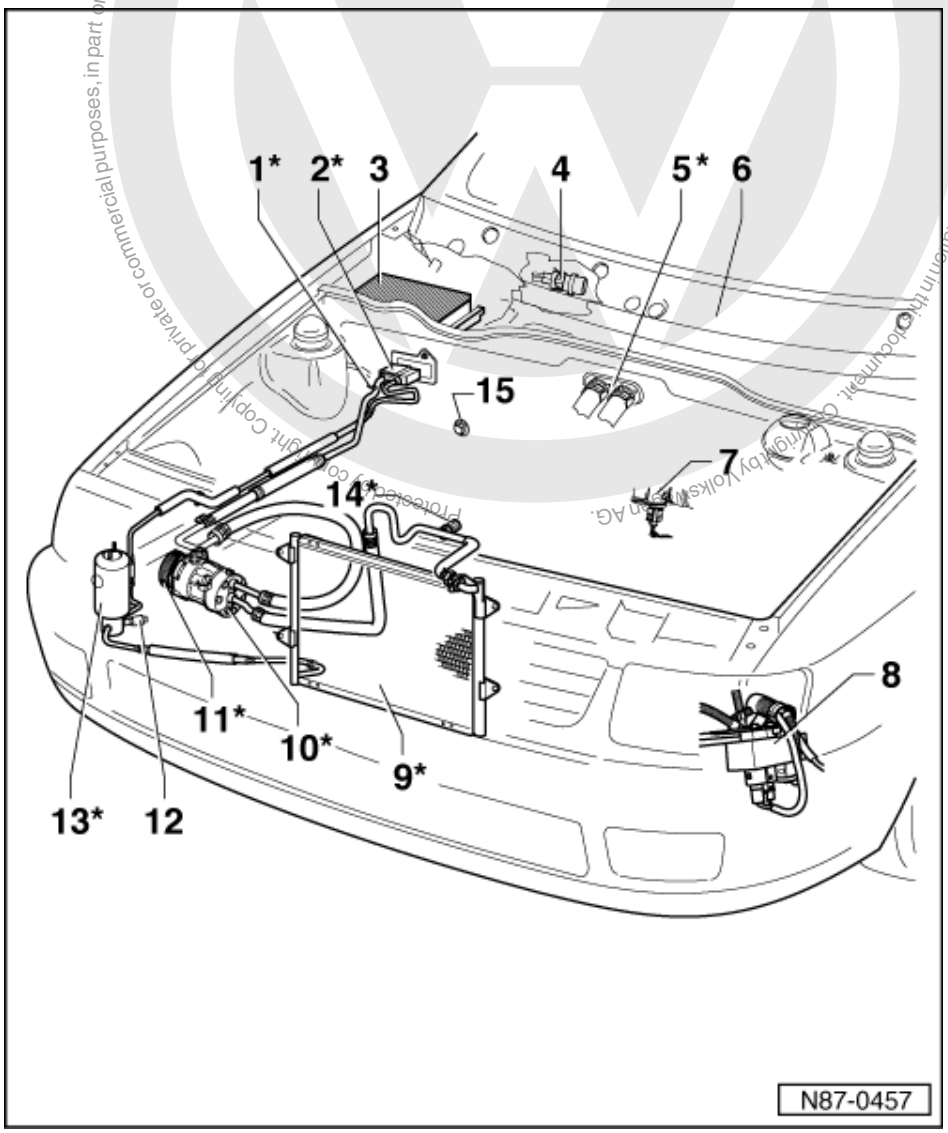

Warning!
Always disconnect the battery earth strap before working on the electrical system.

Notes:

- Obtain radio anti-theft coding before disconnecting the battery.
- Check vehicle equipment (radio, clock, electric windows) as per Workshop Manual and/or Owner's Manual when reconnecting the battery.

Protected by copyright. Copying for private or commercial purposes, in part or in whole, is not permitted unless authorised by Volkswagen AG. Volkswagen AG does not guarantee or accept any liability with respect to the correctness of information in this document. Copyright by Volkswagen AG.

satelettronica

- Components marked with an * can only be repaired in specialist workshops, this is because the refrigerant must first be extracted with service station V.A.G 1885.

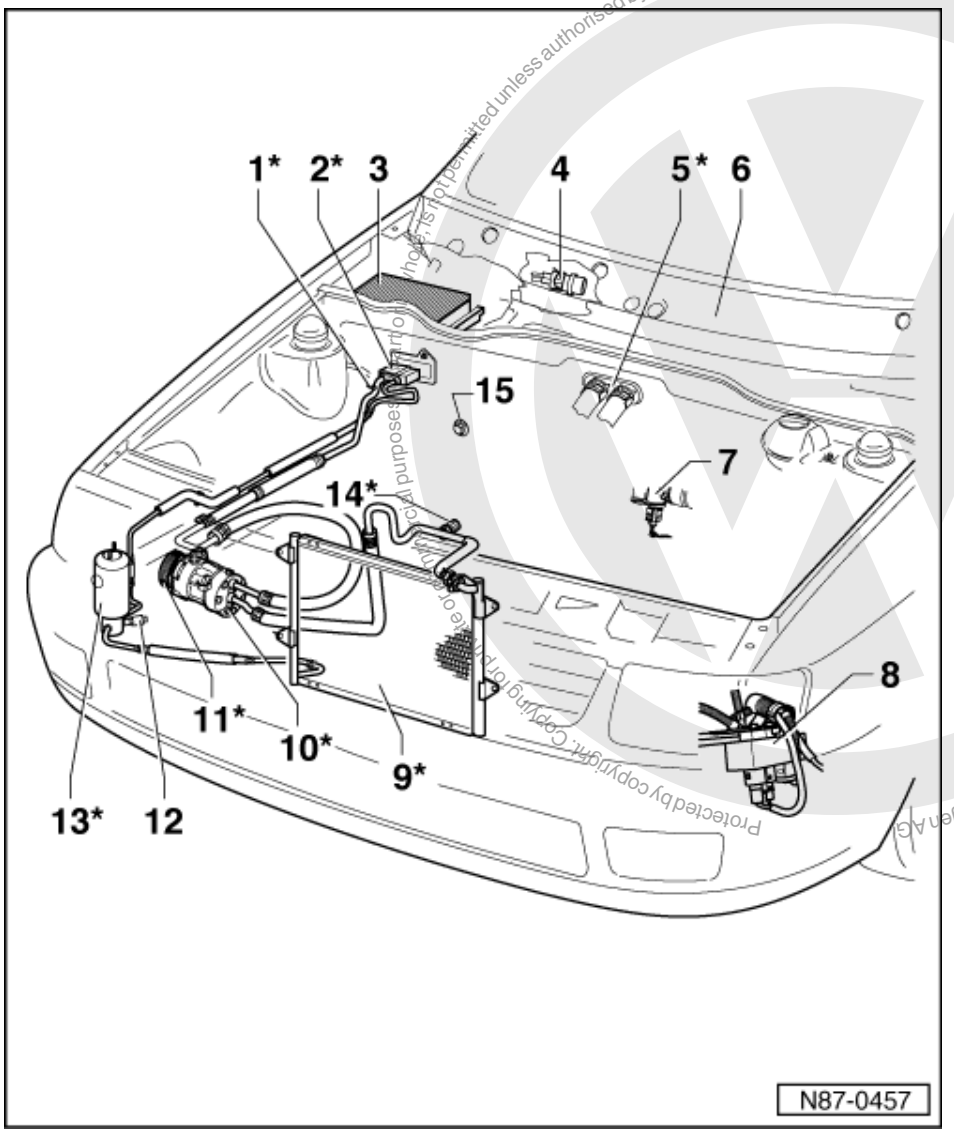

1 Evacuating and charging valve*
- Low pressure side

2 Expansion valve*
- Opening must be sealed sufficiently to stop ingress of water

3 Dust and pollen filter
- Under the plenum chamber cover
- Removing =>Page 7

Protected by copyright. Copying for private or commercial purposes, in whole or in part, is not permitted unless authorised by Volkswagen AG. Volkswagen AG does not guarantee or accept any liability with respect to the correctness of information in this document. Copyright by Volkswagen AG.
satelettronica

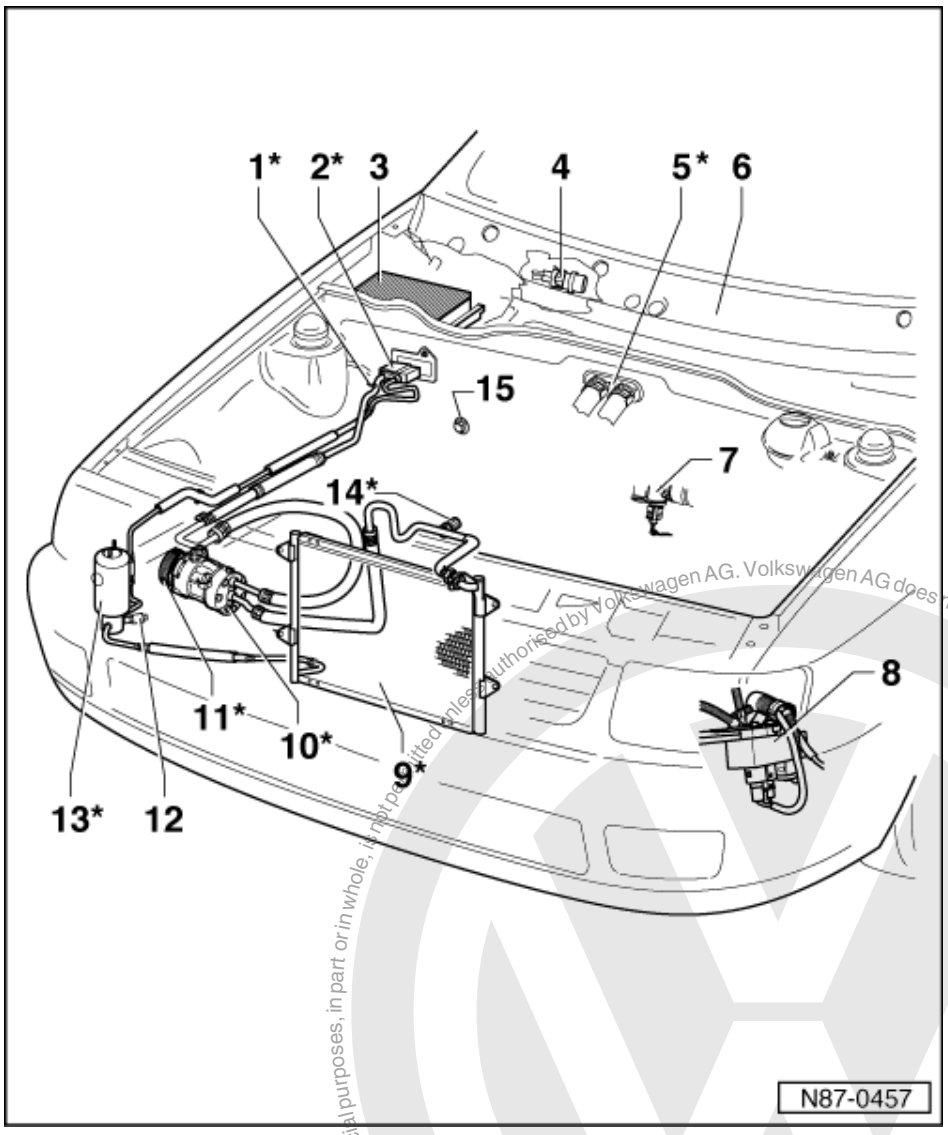

4 Ambient temperature switch -F38-
- Removing =>Fig. 3

5 Heat exchanger opening
- Switches off magnetic coupling -N25- at low ambient temperature (off at 2°C, on at 7°C).
- Held in clip in centre of plenum chamber

6 Plenum chamber cover
- Removing and installing => Page 7

7 Coolant temperature sender for air conditioner switch-off -G62-
- -G62- switches off magnetic coupling -N25- at excessively high coolant temperatures(off at 119°C, on at 112°C).

Protected by copyright. Copying for private or commercial purposes, in part or in whole, is not permitted unless authorised by Volkswagen AG. Volkswagen AG does not guarantee or accept any liability with respect to the correctness of information in this document. Copyright by Volkswagen AG.
satelettronica

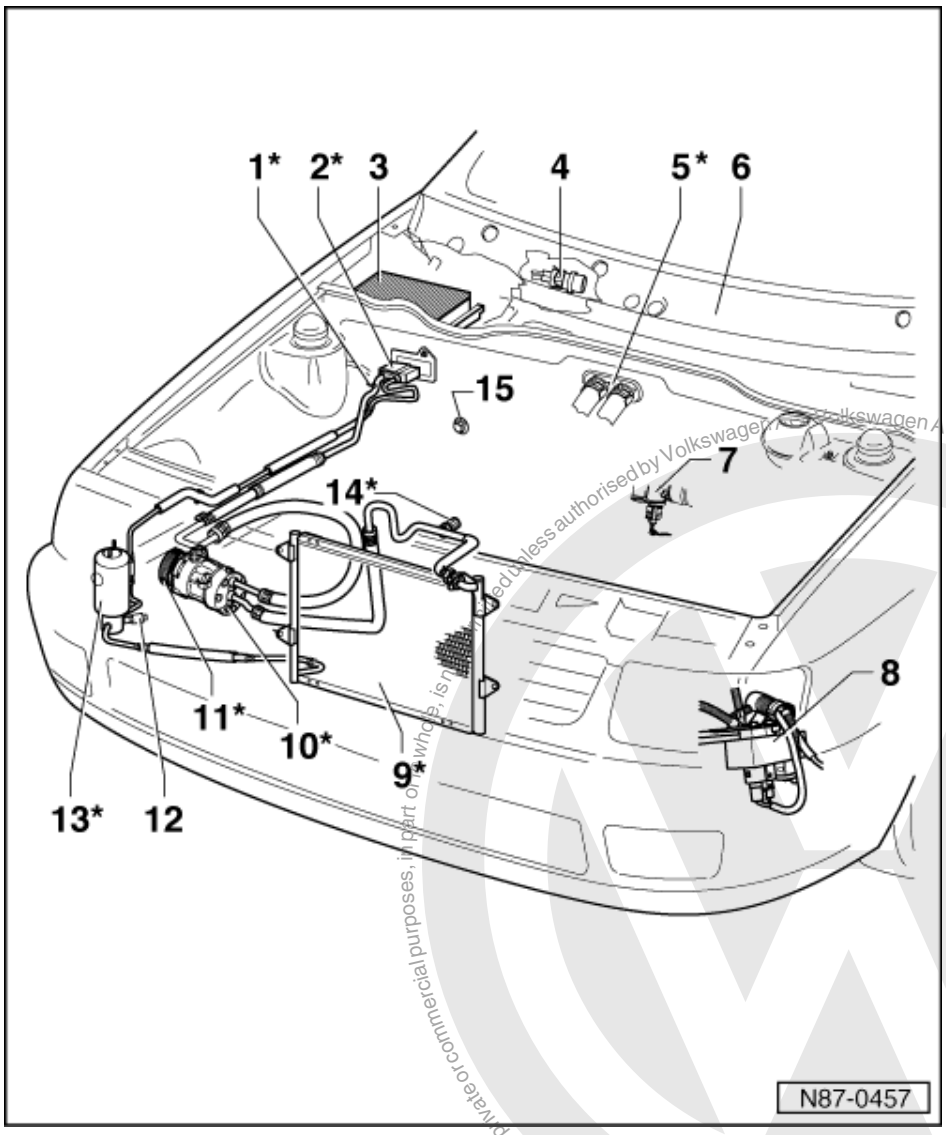

8 Radiator fan control unit -J293-

9 Condenser*

10 Pressure relief valve*

- Checking => Page 80 , Fig. 4

11 Magnetic coupling -N25-*

- Manufacturer: Sanden
- Servicing magnetic coupling -N25- => Page 60

12 High pressure sender -G65-

- Removing and installing:
- Removing => Fig. 2
- Tightening torque 8 Nm
- Renew O ring seal (note Part No.).
- The high pressure sender can be removed without evacuating the refrigerant system.

Protected by copyright. Copying for private or commercial purposes, in part or in whole, is not permitted unless authorised by Volkswagen AG. Volkswagen AG does not guarantee or accept any liability with respect to the correctness of information in this document. Copyright by Volkswagen AG.
satelettronica

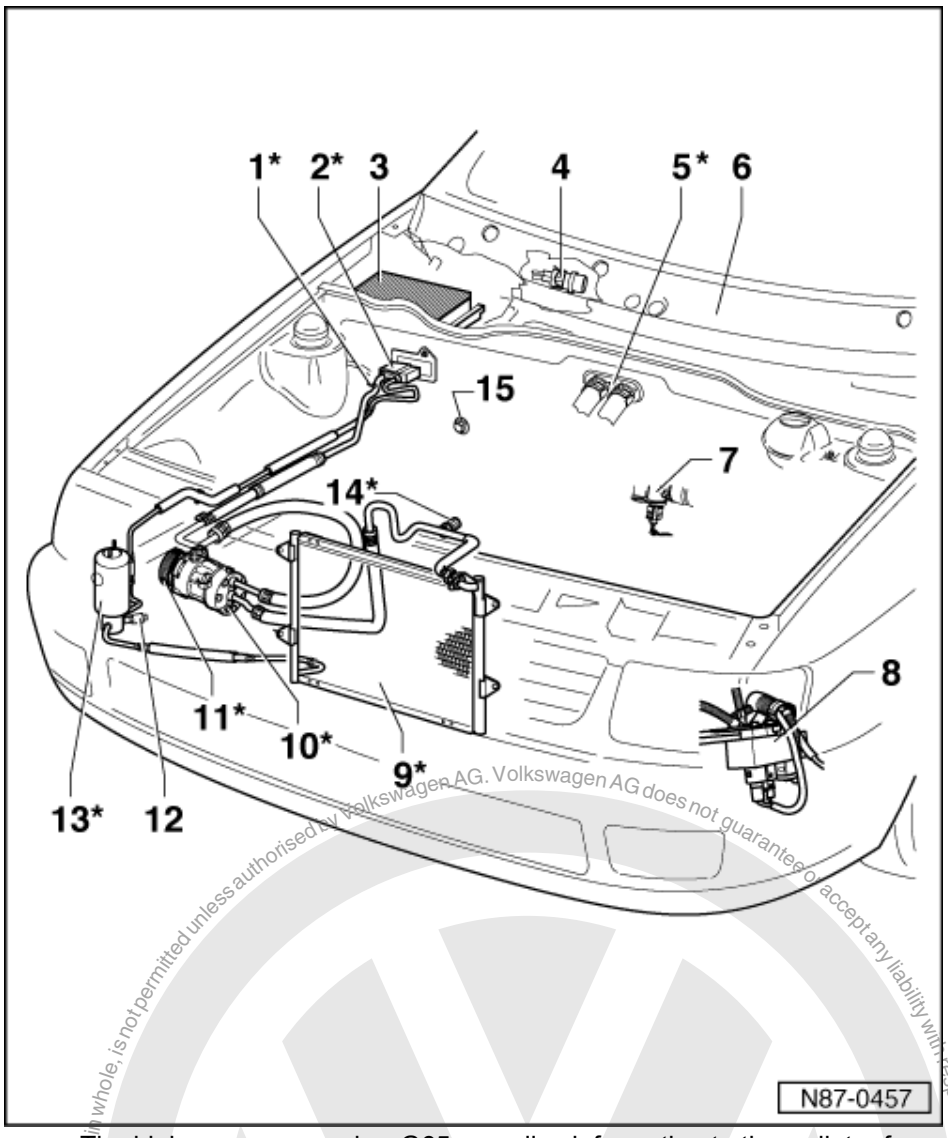

- The high pressure sender -G65- supplies information to the radiator fan control unit -J293- and to the engine control unit.
  Function:
- Switches radiator fan -V7- to next higher speed when pressure increases in refrigerant circuit.
- The high pressure sender -G65- can be checked via engine control unit self-diagnosis.
- Checking air conditioner high pressure sender -G65- => Page 81
- Switches off conditioning system when pressure is excessive (for example, insufficient engine cooling).
- Switches off conditioning system when pressure is too low (for example, loss of refrigerant).

Protected by copyright. Copying for private or commercial purposes, in whole, is not permitted unless authorised by Volkswagen AG. Volkswagen AG does not guarantee or accept any liability with respect to the correctness of information in this document. Copyright by Volkswagen AG.
satelettronica

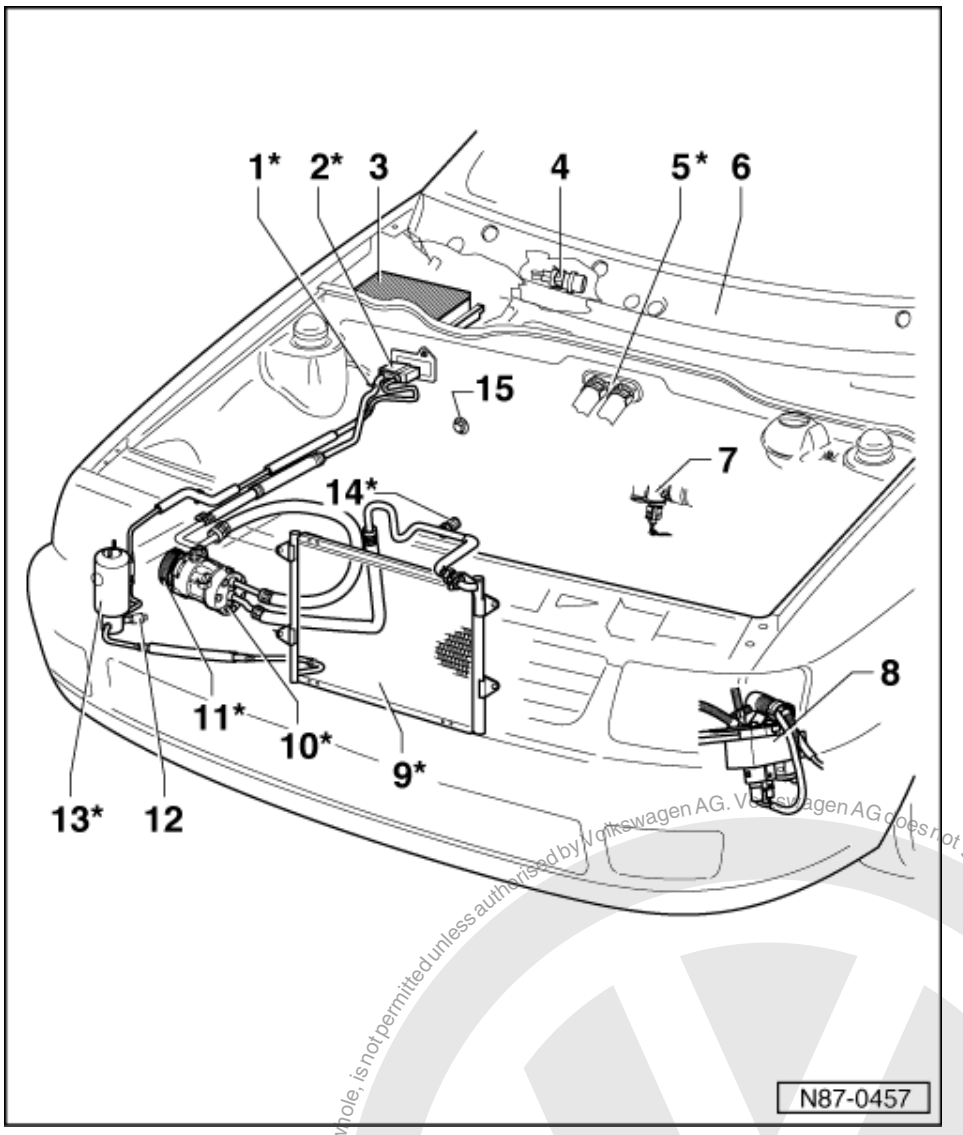

13 Fluid reservoir with drier*

14 Evacuating and charging valve*

- High pressure side

15 Water drain valve

- Removing and installing => Fig. 1
- Valve lips must not be sealed with underseal

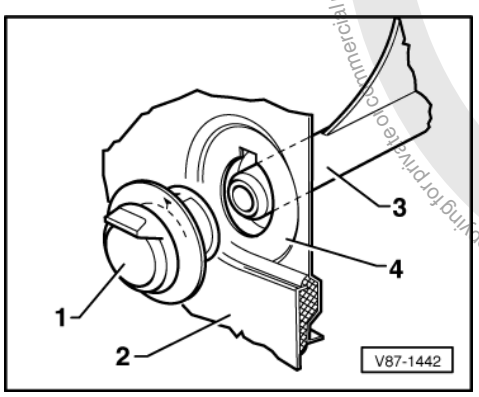

Protected by copyright. Copying for private or commercial purposes, in part or in whole, is not permitted unless authorised by Volkswagen AG. Volkswagen AG does not guarantee or accept any liability with respect to the correctness of information in this document. Copyright by Volkswagen AG.
satelettronica

-> Fig.1 Removing and installing water drain valve

1 - Water drain valve
2 - Bulkhead
3 - Water drain pipe, on evaporator housing
4 - Mounting plate

- Install water drain valve with opening of lip seal facing downwards.
- Water drain valve must not be clogged with underbody sealant.

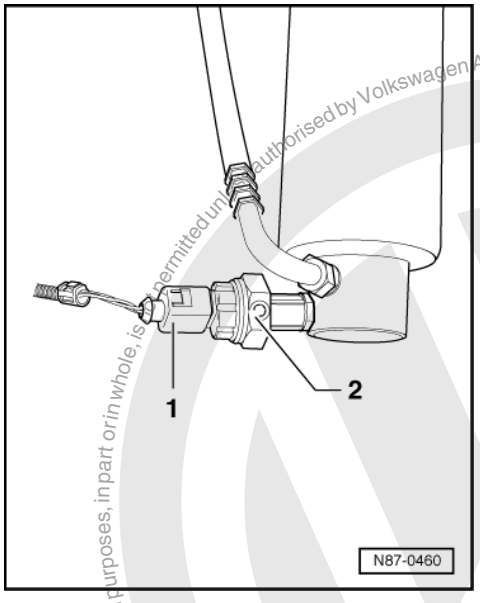

-> Fig.2 Removing high pressure sender -G65-

- Pull off connector -1-.
- Unscrew high pressure sender -2-.
- Replace seal.

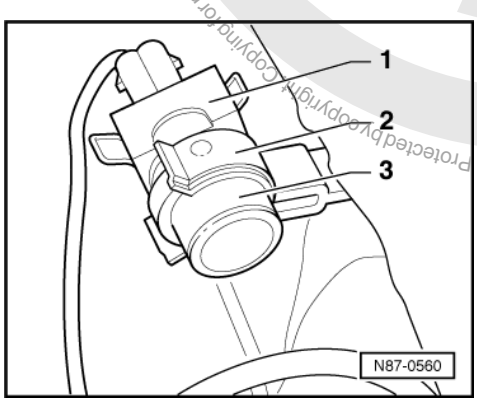

Fig3. Removing ambient temperature switch -F38-

- -> Pull off connector -1-.
- Unclip ambient temperature switch -3- from retainer -2-.

Protected by copyright. Copying for private or commercial purposes, in part or in whole, is not permitted unless authorised by Volkswagen AG. Volkswagen AG does not guarantee or accept any liability with respect to the correctness of information in this document. Copyright by Volkswagen AG.
satelettronica

2.7 - Removing and installing air conditioner compressor bracket, engine code: APE

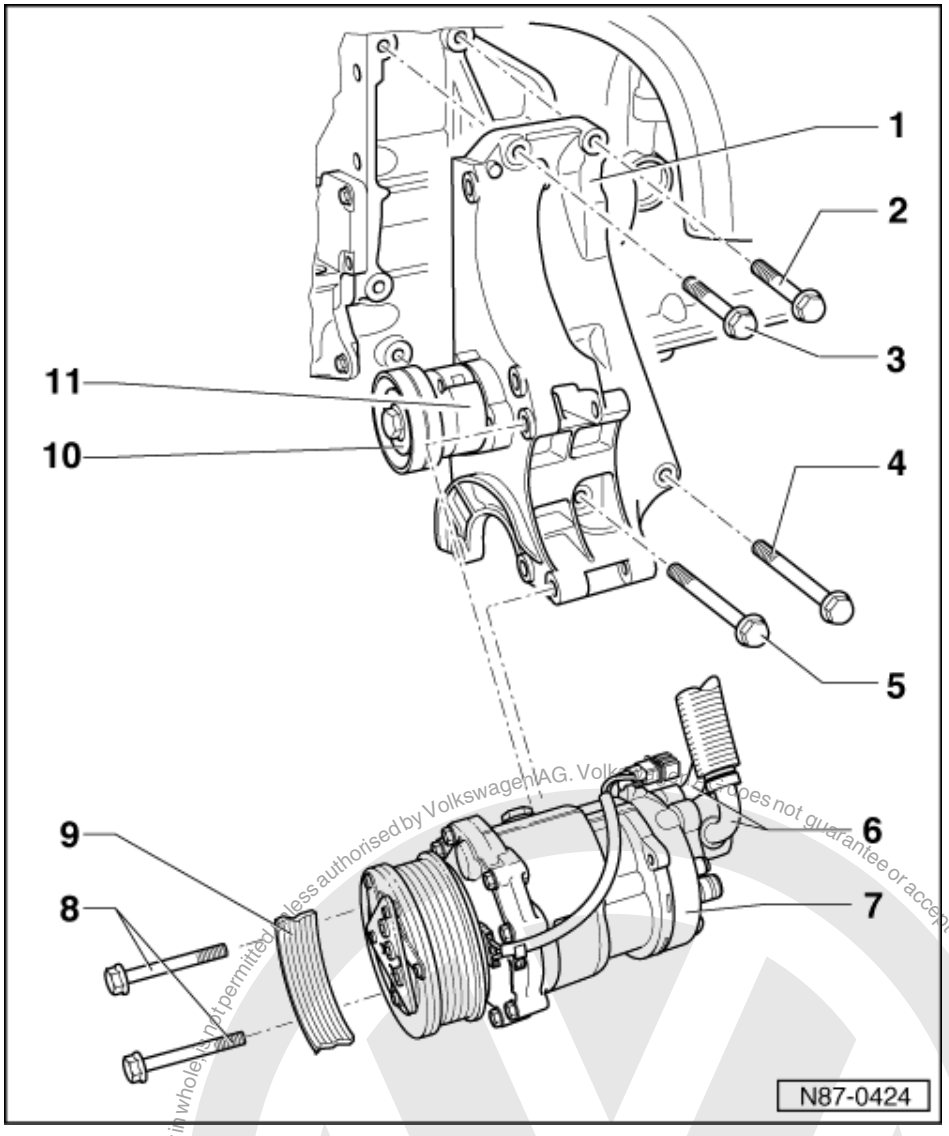

Special tools, workshop equipment, test and measuring appliances and aux. items required

- Torque wrench V.A.G 1331 (5 - 50 Nm)

Notes:

- The compressor bracket and related components can be removed and installed without having to open the refrigerant circuit.
- To remove the ribbed belt:

=> Workshop manual Engine, Mechanics; Repair group 13; Dismantling and assembling engine. Dismantling and assembling engine.

satelettronica

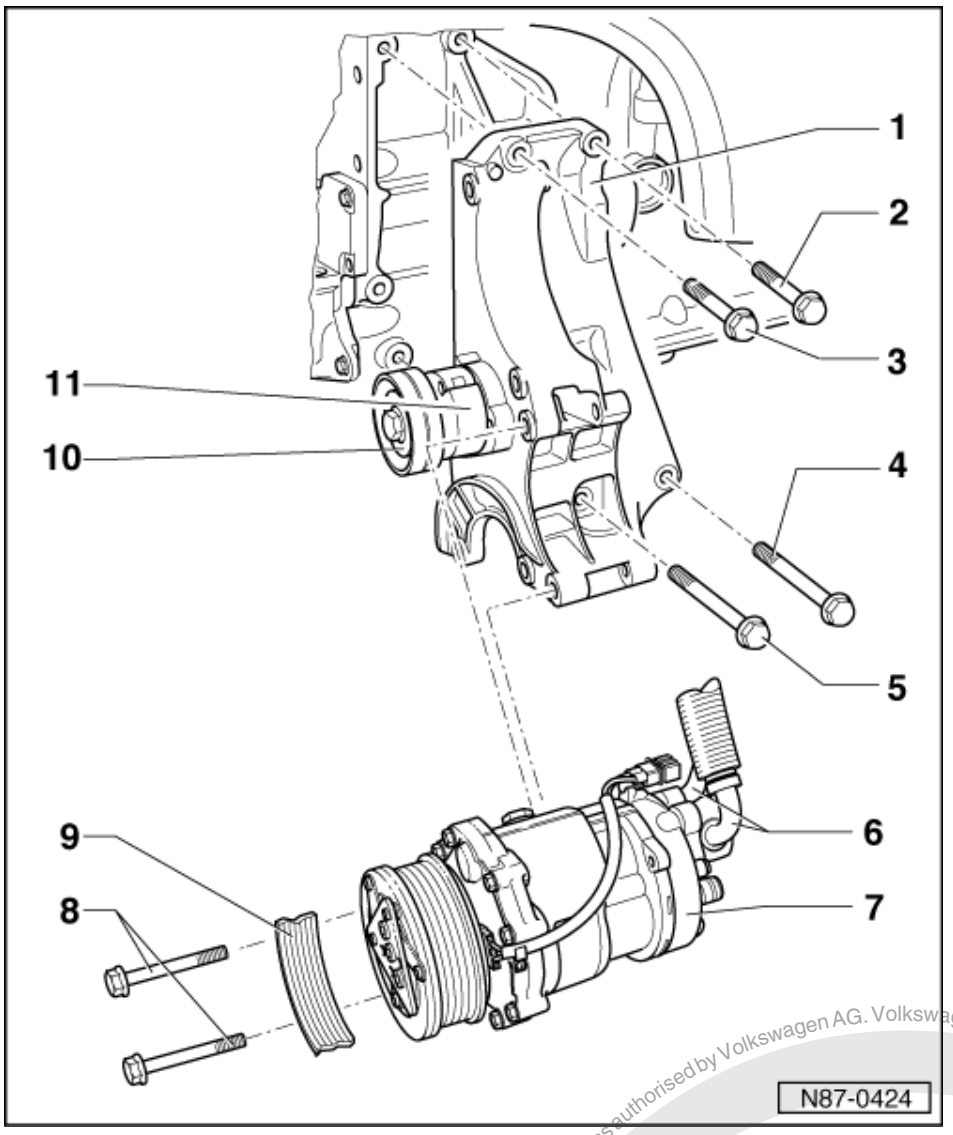

1 Alternator, compressor and P.A.S. vane pump bracket

Removing

- Pull lock carrier forwards.

=> General body repairs; Repair group 50; Body front; lock carrier servicing position Body front lock carrier servicing position

- Removing alternator

=> Electrical system; Repair Group 27; Removing and installing alternator Removing and installing alternator

- Removing P.A.S. vane pump

=> Repair Group 48; Removing and installing P.A.S. vane pump Removing and installing P.A.S. vane pump

- Take compressor off bracket and secure to body with suitable item (e.g. welding wire) =>Fig. 1
- Unbolt bracket from cylinder block

satelettronica
Protected by copyright. Copying for private or commercial purposes, in part or in whole, is not permitted unless authorised by Volkswagen AG. Volkswagen AG does not guarantee or accept any liability with respect to the correctness of information in this document. Copyright by Volkswagen AG.

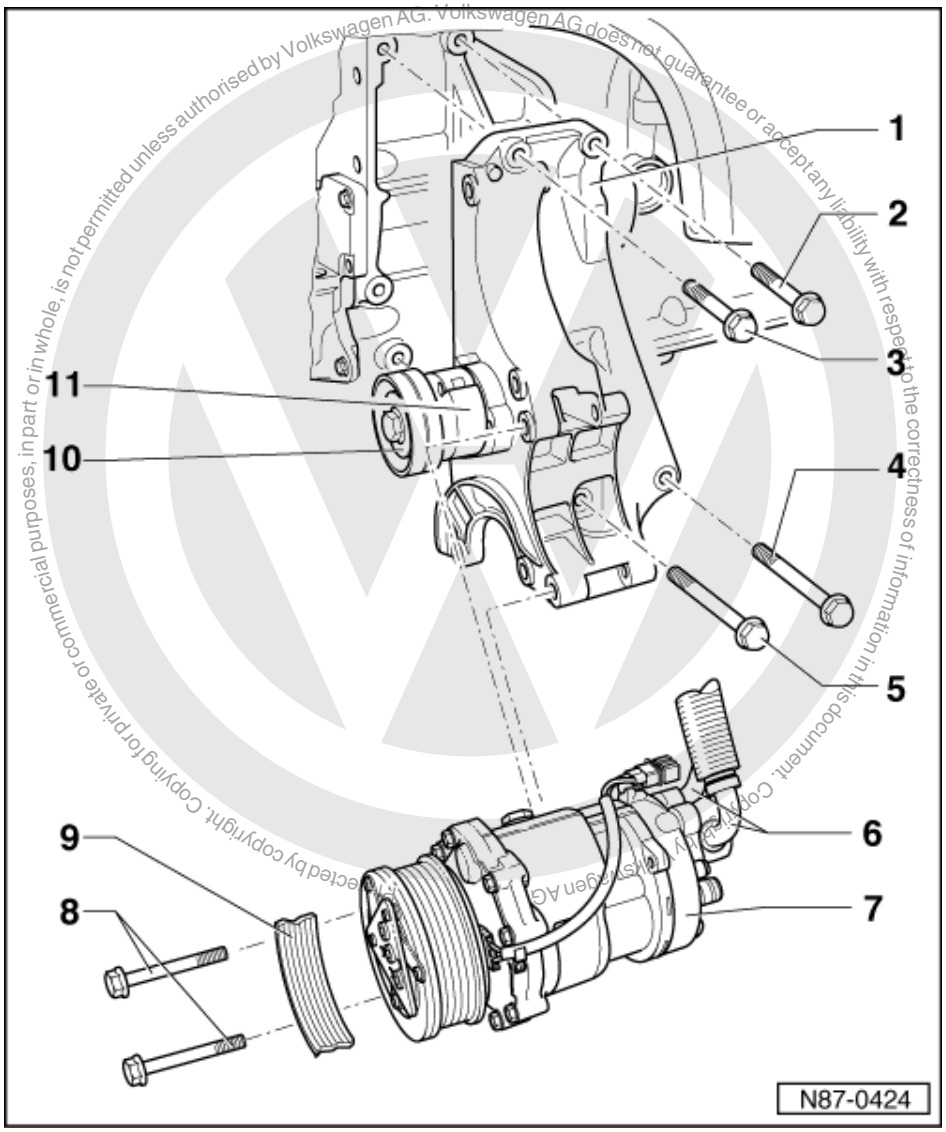

Volkswagen AG. Volkswagen AG does not guarantee or accept any liability with respect to the correctness of information in this document. Copyright by Volkswagen AG. Copying for private or commercial purposes, in part or in whole, is not permitted unless authorised by Volkswagen AG. Copyright by Volkswagen AG.

satelettronica

Installing

- When installing observe:
- Renew securing bolts.
- Observe securing bolts tightening sequence.
- Tightening sequence:
  First tighten hexagon bolt item - 3 -, then hexagon bolt item - 5 - and then tighten hexagon bolts item - 2 - and item - 4 - last.

2 Hexagon bolt M10x55

- 45 Nm
- Before turning in, clean thread and coat with locking fluid D 000 600 A2.

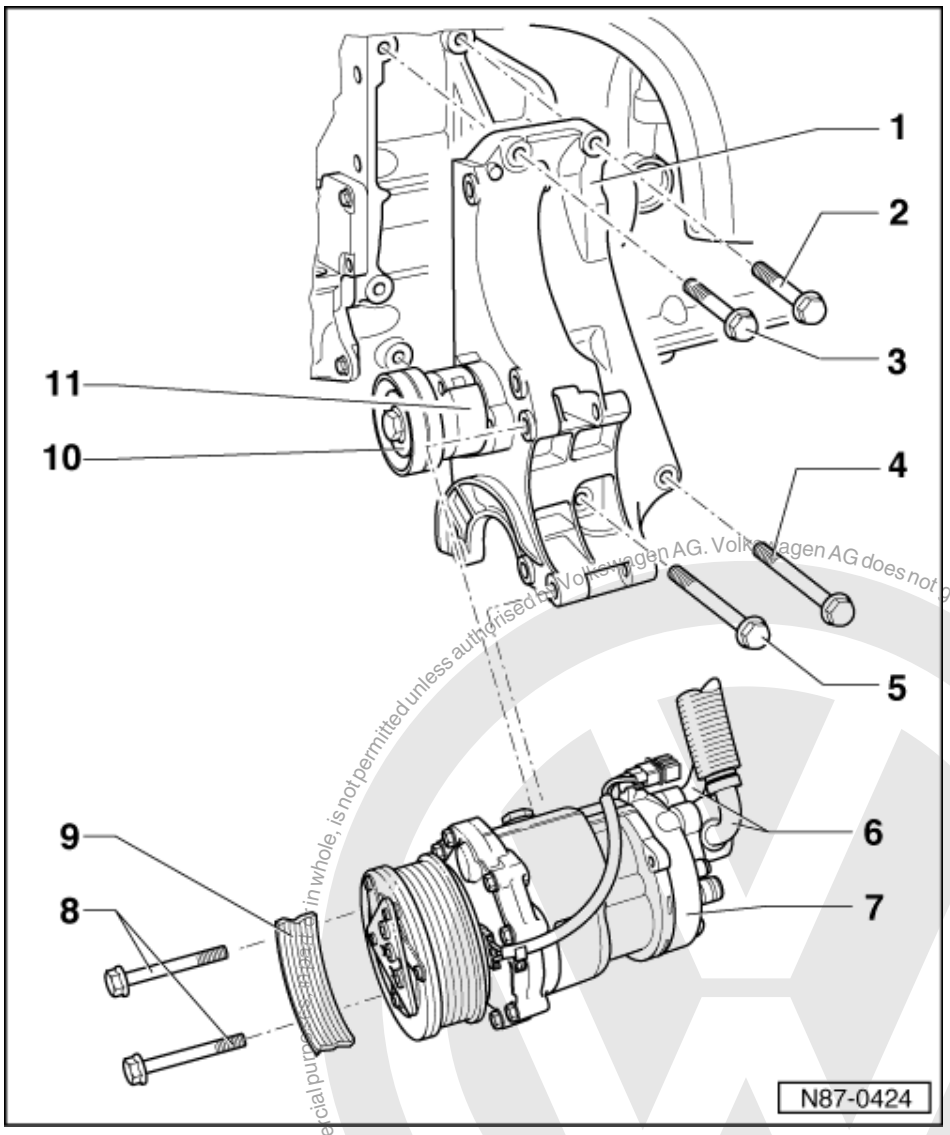

3 Hexagon bolt M10x55
- 45 Nm
- Before turning in, clean thread and coat with locking fluid D 000 600 A2.

4 Hexagon bolt M10x100
- 45 Nm
- Before turning in, clean thread and coat with locking fluid D 000 600 A2.

5 Hexagon bolt M10x100
- 45 Nm
- Before turning in, clean thread and coat with locking fluid D 000 600 A2.

Protected by copyright. Copyright. Copyright by Volkswagen AG. Volkswagen AG does not guarantee or accept any liability with respect to the correctness of information in this document. Copyright by Volkswagen AG. Copy for private or commercial purposes, in whole, is not permitted unless authorised by Volkswagen AG.
satelettronica

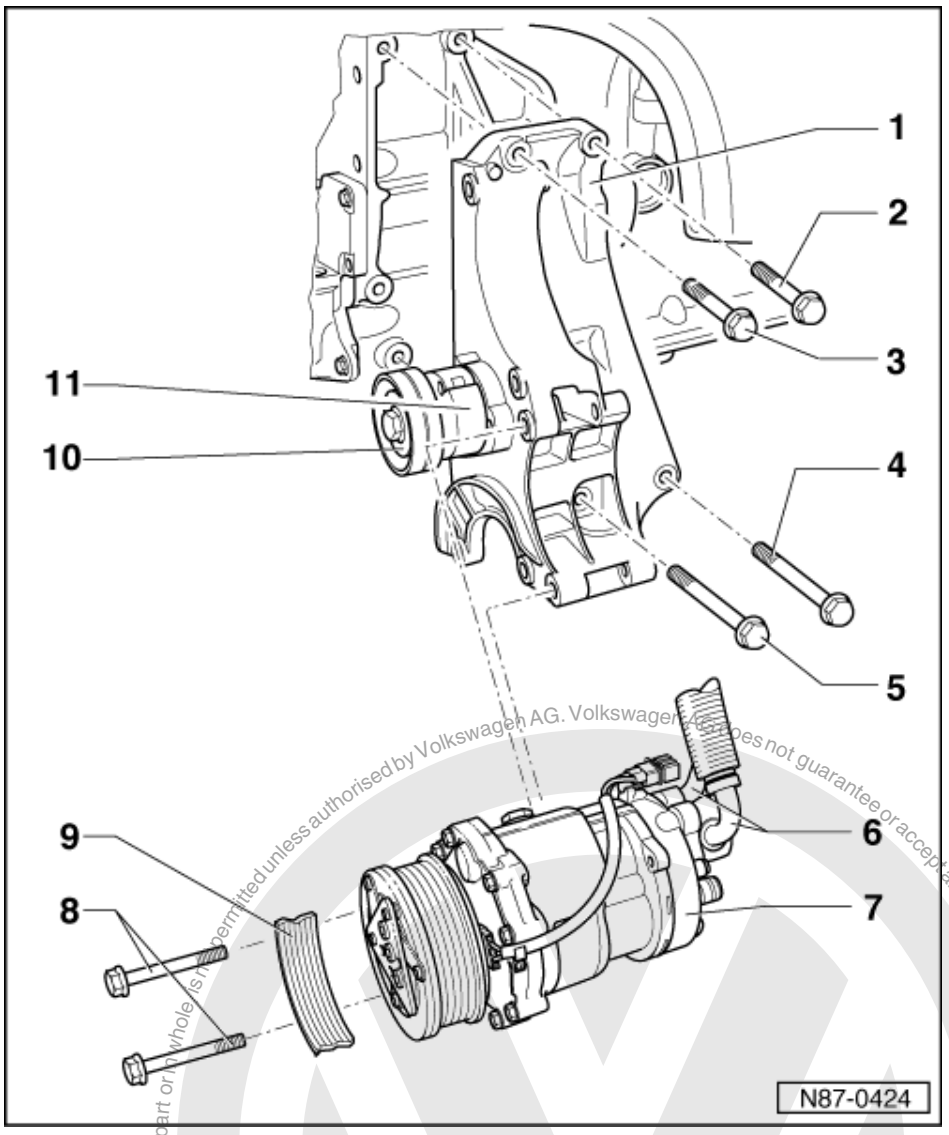

6 Refrigerant hoses
7 Compressor
- Removing:
- First remove P.A.S. vane pump

=> Repair Group 48; Removing and installing P.A.S. vane pump Removing and installing P.A.S. vane pump

- Loosen hexagon bolts - 8 - a couple of turns and knock-back threaded sleeve from compressor. Then remove hexagon bolts.
- Take compressor off bracket and secure to body with suitable item (e.g. welding wire) =>Fig. 59 .

8 Hexagon bolt M10x112
- 45 Nm

Protected by copyright. Copyright by Volkswagen AG.
Copyright by Volkswagen AG. Volkswagen AG does not guarantee or accept any liability with respect to the correctness of information in this document. Copyright by Volkswagen AG. Reproduction of this document or part of it in any form is not permitted unless authorised by Volkswagen AG.
satelettronica

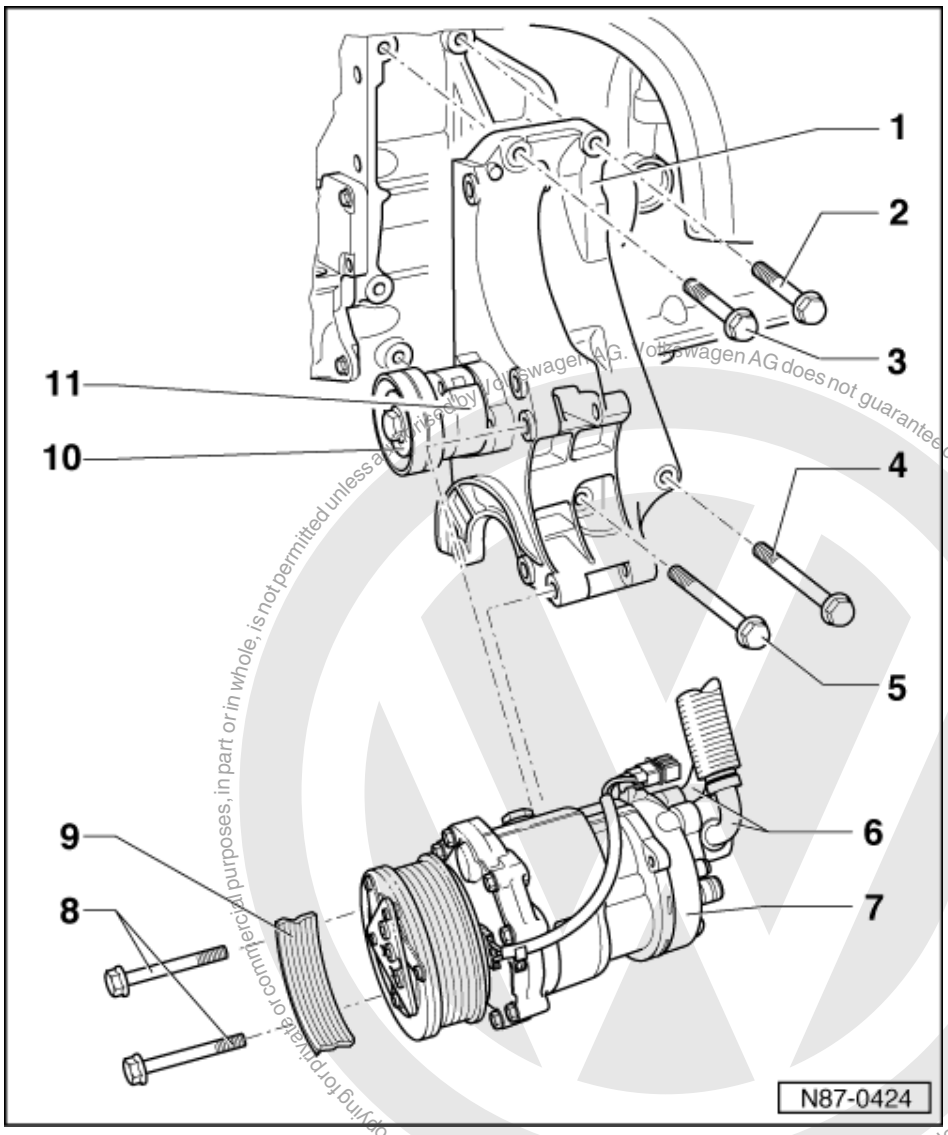

9 Ribbed belt

- Removing and installing

=> Repair group 13; Dismantling and assembling engine; Removing and installing ribbed belt Dismantling and assembling engine Removing and installing ribbed belt

- Ribbed belt routing
  => Fig. 2

10 Tensioner

11 Tensioning element for tensioner

Protected by copyright. Copying for private or commercial purposes, in part or in whole, is not permitted unless authorised by Volkswagen AG. Volkswagen AG does not guarantee or accept any liability with respect to the correctness of information in this document. Copyright by Volkswagen AG.

satelettronica

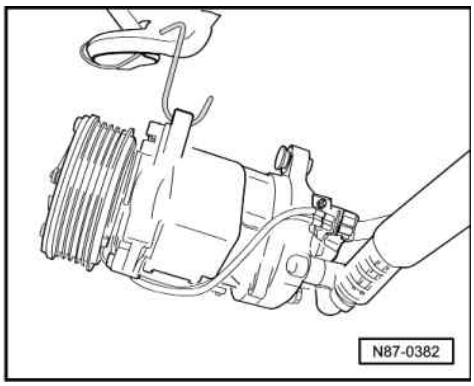

-> Fig.1 Securing air conditioner compressor to body

If the compressor is removed without opening the refrigerant circuit, the compressor should be secured to the body with suitable material, for example, welding wire.

When doing this, ensure the refrigerant hoses on the compressor are not stressed.

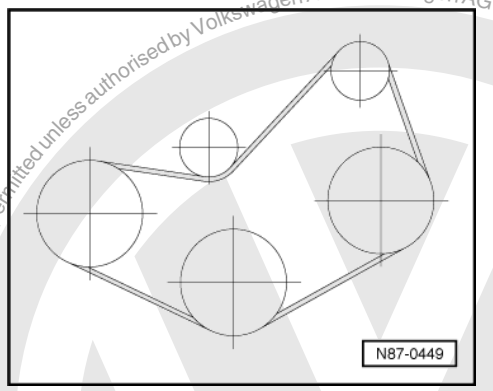

-> Fig. 2 Ribbed belt routing

Note:

When installing the belt ensure it is correctly seated in the pulley.

Protected by copyright. Copyright for private or commercial purposes, in part or in whole, is not permitted unless authorised by Volkswagen AG. Volkswagen AG does not guarantee or accept any liability with respect to the correctness of information in this document. Copyright by Volkswagen AG.
satelettronica

2.8 - Servicing magnetic coupling -N25-; Sanden unit

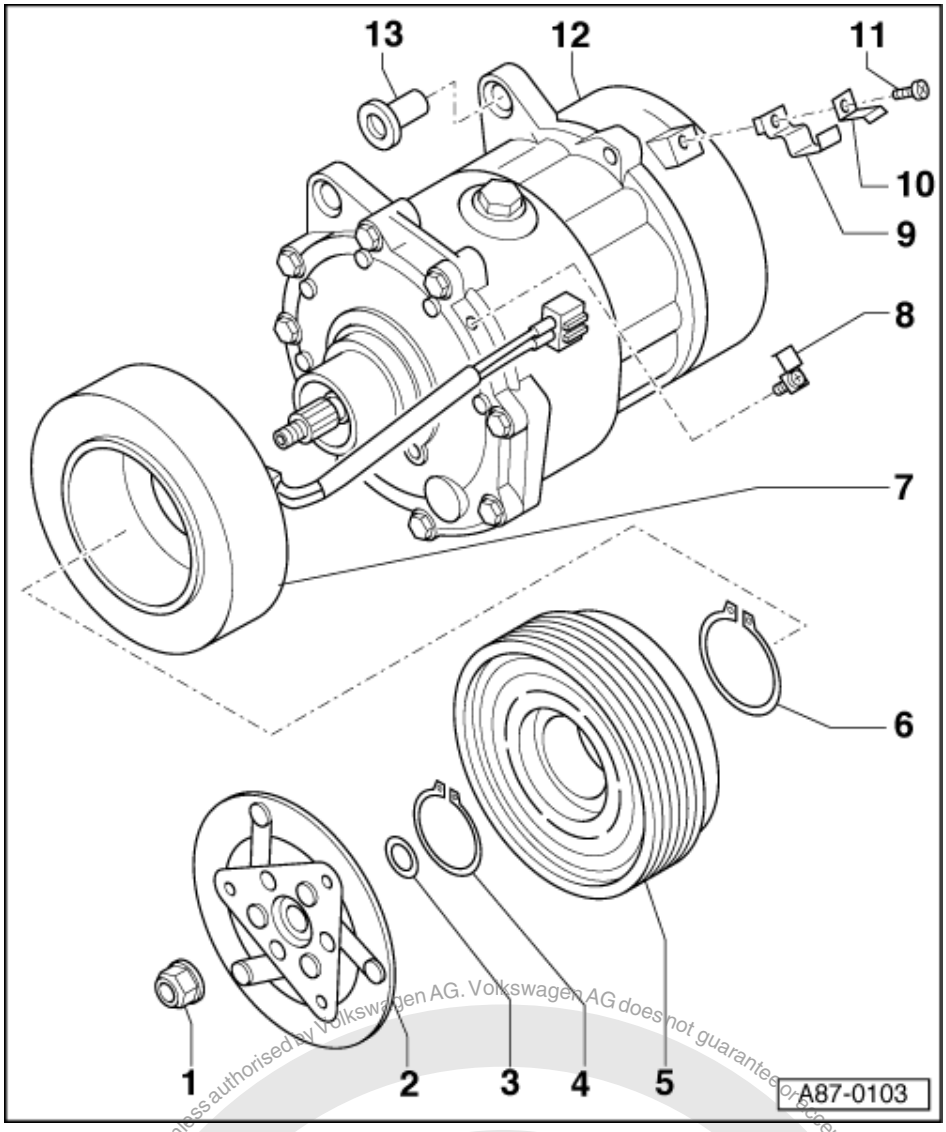

Special tools, workshop equipment, test and measuring appliances and aux. items required

- V.A.G 1331 Torque wrench (5...50 Nm)

Notes:

- It is not necessary to open the refrigerant circuit to repair the magnetic coupling with the compressor installed.
- If the compressor has to be removed, take the vehicle to a workshop with trained mechanics (Specialist workshops for air conditioning), the refrigerant must be evacuated with Service station V.A.G 1885.

Protected by copyright. Copying for private or commercial purposes, in part or in whole, is not permitted unless authorised by Volkswagen AG. Volkswagen AG does not guarantee or accept any liability with respect to the correctness of information in this document. Copyright by Volkswagen AG.
satelettronica

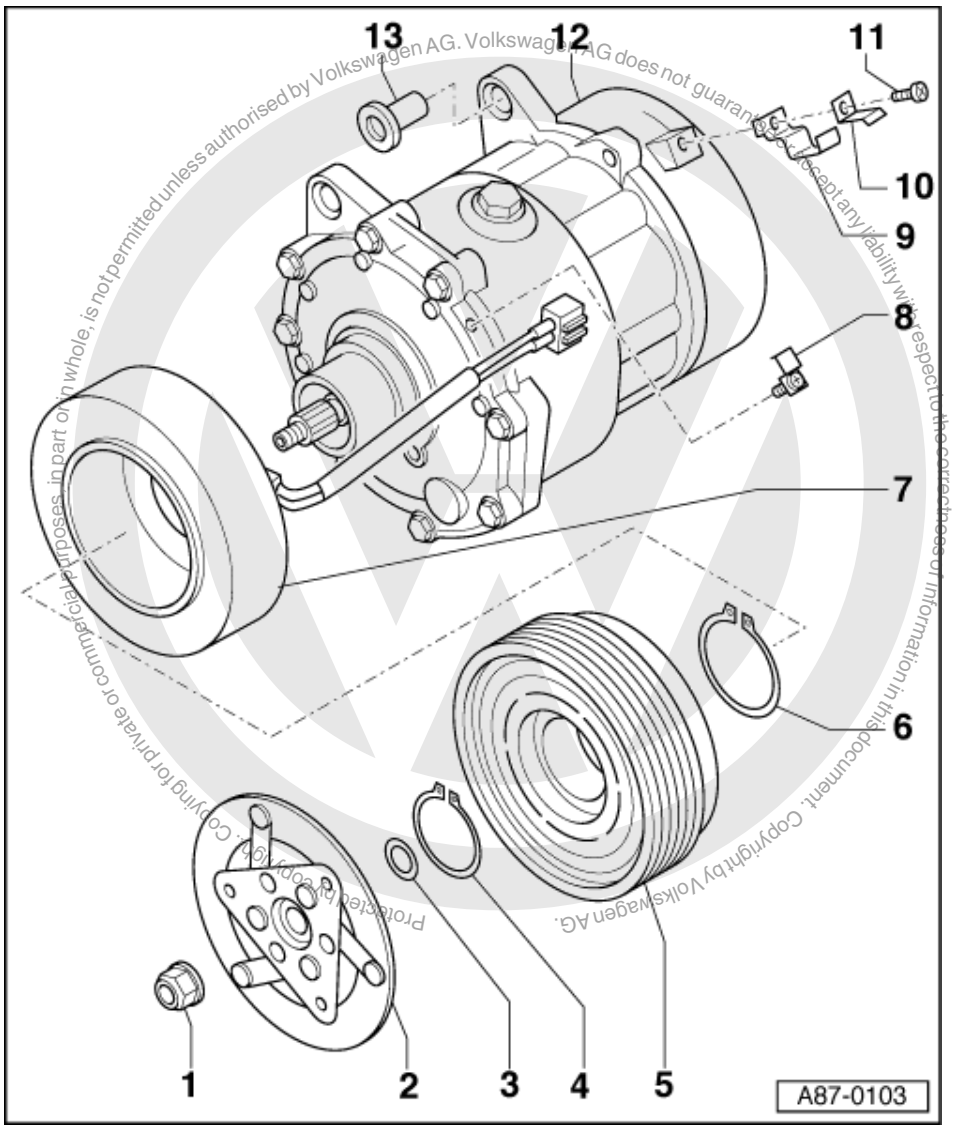

Protected by copyright. Copying for private or commercial purposes, in part or in whole, is not permitted unless authorised by Volkswagen AG. Volkswagen AG does not guarantee or accept any liability with respect to the correctness of information in this document. Copyright by Volkswagen AG.

Notes:

- To remove the ribbed belt:

=> Workshop manual Engine, Mechanics; Repair group 13; Dismantling and assembling engine. Dismantling and assembling engine.

- Removing magnetic coupling from compressor and refitting again =>Page 65 .

satelettronica

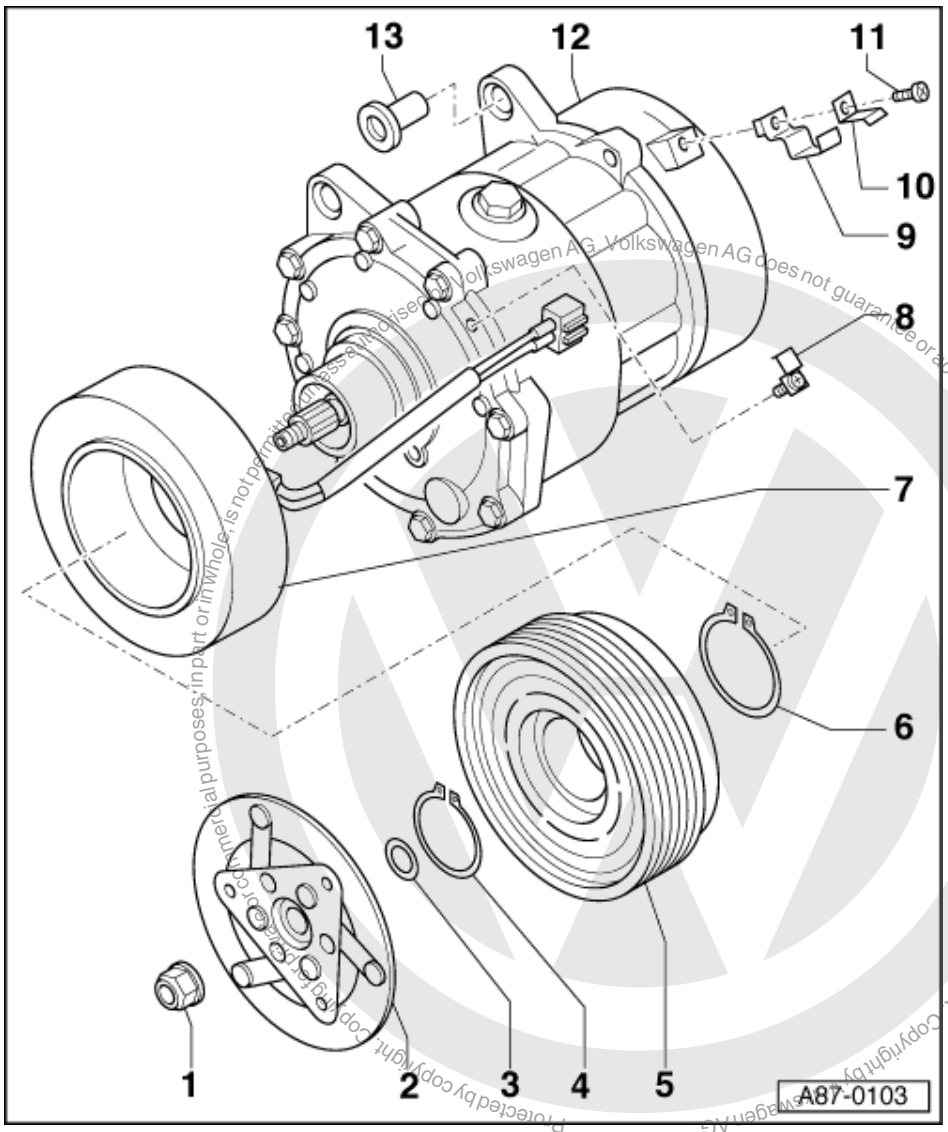

Protected by copyright. Copyright by Volkswagen AG. Volkswagen AG does not guarantee or accept any liability with respect to the correctness of information in this document. Copying for private or commercial purposes, in part or in whole, is not permitted unless authorised by Volkswagen AG.

1 **Hexagon nut**
- Self-locking
- Replacing
- 20 Nm
- Loosening and tightening =>Page 65

2 **Coupling plate**
- Pulling off =>Page 66

3 **Spacer**
- To adjust the clearance between coupling and belt pulley
- Clearance: 0.4...0.8 mm
- Checking distance=>Page 67

4 **Circlip**
- Replacing
- Install correctly:
  Flat side faces compressor
- Ensure seated correctly in groove

satelettronica

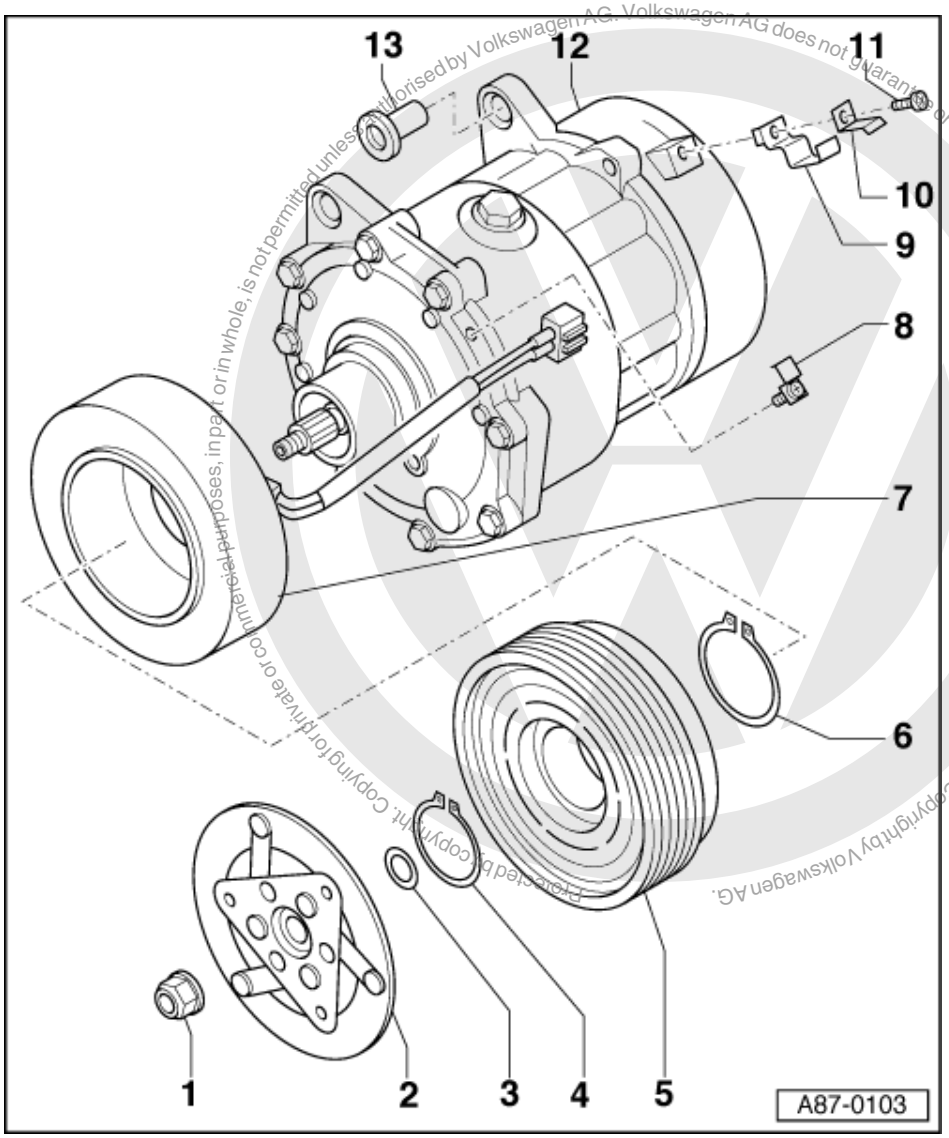

Protected by copyright. Copyright by Volkswagen AG. Volkswagen AG does not guarantee or accept any liability with respect to the correctness of information in this document. Copying for private or commercial purposes, in part or in whole, is not permitted unless authorised by Volkswagen AG.

5 Belt pulley
- ◆ Pulling off =>Page 66

6 Circlip
- ◆ Replacing
- - Install correctly:
  Flat side faces compressor
- ◆ Ensure seated correctly in groove

7 Magnet windings
- ◆ Installing =>Page 66

Notes:

An overheating protection is installed in the magnet windings. The overheating protection interrupts the magnet windings as soon as the magnetic coupling overheats (for example a binding compressor).

8 Retainer
- ◆ With screw

9 Retainer

satelettronica

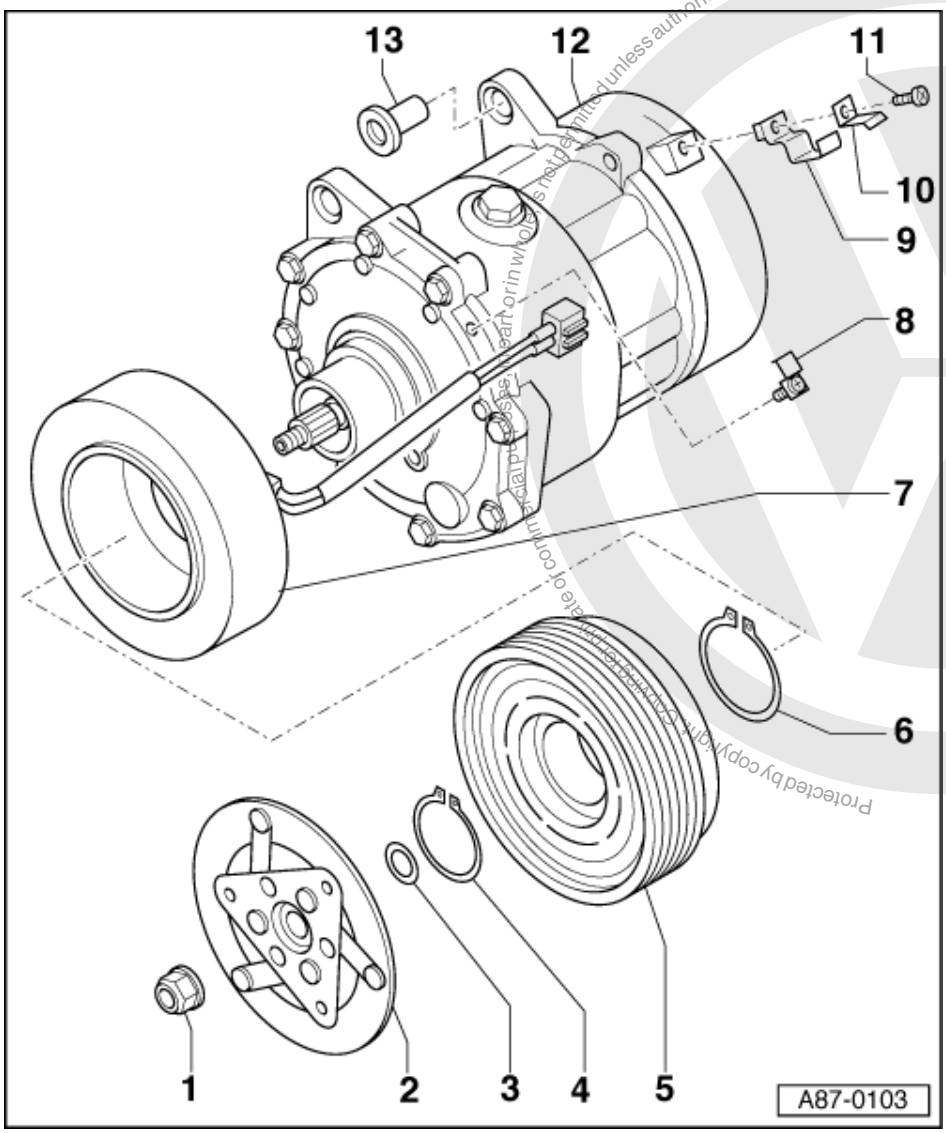

10 Retainer
11 Bolt
12 Compressor
13 Threaded bush

Protected by copyright. Copying for private or commercial purposes, in part or in whole, is not permitted unless authorised by Volkswagen AG. Volkswagen AG does not guarantee or accept any liability with respect to the correctness of information in this document. Copyright by Volkswagen AG.
satelettronica

2.9 - Removing magnetic coupling from compressor and refitting again

Special tools, workshop equipment, testers, measuring instruments and auxiliary items required

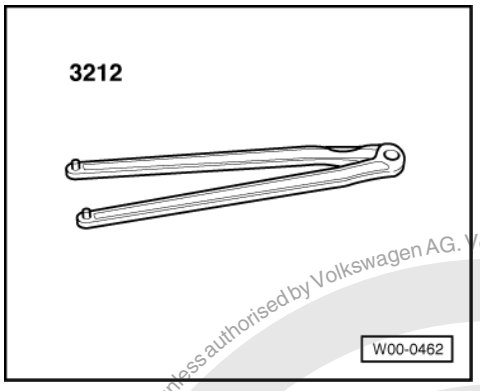

- -> 3212 Two hole pin wrench
- Two arm puller
- Three arm puller
- Depth gauge
- V.A.G 1331 Torque wrench (5...50 Nm)

Notes:

- It is not necessary to open the refrigerant circuit to remove and refit the magnetic clutch.
- To remove the ribbed belt:

=> Workshop manual Engine, Mechanics; Repair group 13; Dismantling and assembling engine. Dismantling and assembling engine.

- On vehicles with a Diesel engine, remove the charge air cooler.

=> Workshop manual Engine, Mechanics; Repair group 21; Charging. Charging.

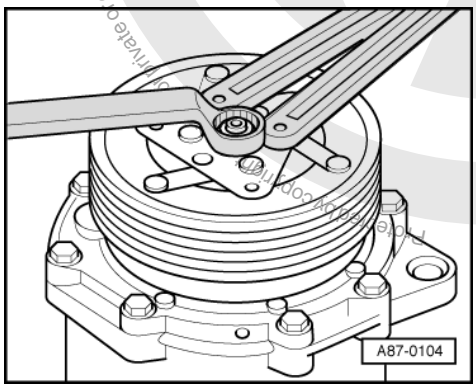

-> Loosening and tightening hexagon nut

- Tightening torque: 20 Nm
Remove hexagon nut.

Use commercially available 2 hole pin wrench 3212 -A- with a pin diameter of 4 mm to counter-hold.

Protected by copyright. Copyright by Volkswagen AG. Volkswagen AG does not guarantee or accept any liability with respect to the correctness of information in this document. Copyright by Volkswagen AG. Private or commercial purposes in part or in whole, not to be republished unless authorised by Volkswagen AG.
satelettronica

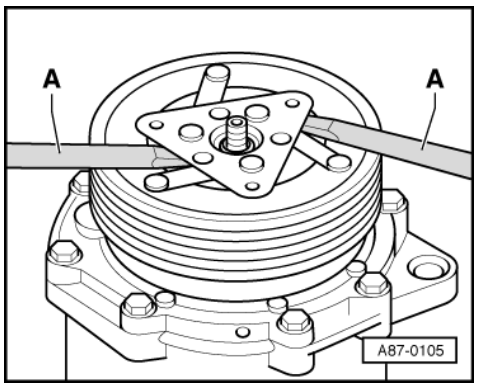

-> Pulling off coupling plate

- Release coupling plate carefully with two screwdrivers -A- and remove.

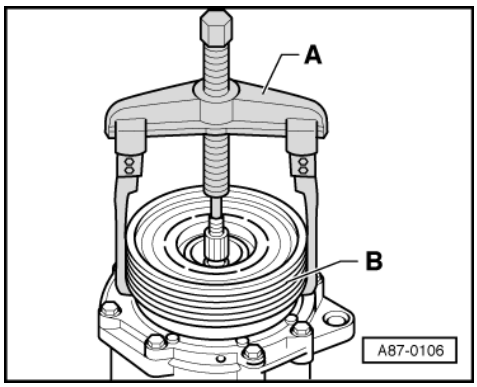

-> Pulling off belt pulley

- Fit commercially available 2 arm puller -A- on shoulder -B- and pull off belt pulley.

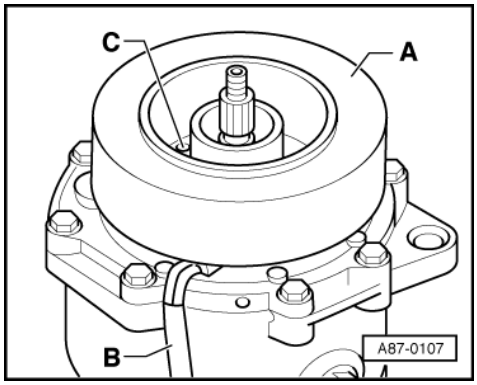

-> Installing magnet windings

- Fit magnet windings onto compressor.
- Locate locking pin -C- in recess -A-.

Protected by copyright. Copying for private or commercial purposes, in part or in whole, is not permitted unless authorised by Volkswagen AG. Volkswagen AG does not guarantee or accept any liability with respect to the correctness of information in this document. Copyright by Volkswagen AG.
satelettronica

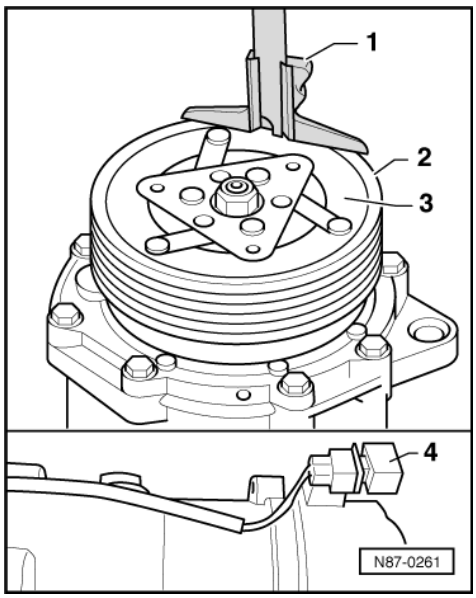

-> Checking clearance

- Clearance: 0.4...0.6 mm

Determining dimension "1"

- Measure dimension between belt pulley -2- and coupling plate -3- with a depth gauge -1- and note dimension.

Perform measurements at three different locations. The measurements must not deviate.

Determining dimension "2"

- Separate connector -A- on compressor.
- Attach connector -4- to vehicle battery (terminal +) using an auxiliary cable.
- Measure dimension between belt pulley -2- and coupling plate -3- with a depth gauge -1- and note dimension.
- Determine clearance.

The clearance is the difference between dimension "1" and dimension "2".

Notes:

- The clearance must lie within the permitted tolerances over the complete circumference.
- The clearance can be measured when the compressor is installed.
- If the clearance is outside the specification, remove coupling plate and adjust clearance by removing or installing spacers.

Protected by copyright. Copying for private or commercial purposes, in part or in whole, is not permitted unless authorised by Volkswagen AG. Volkswagen AG does not guarantee or accept any liability with respect to the correctness of information in this document. Copyright by Volkswagen AG.
satelettronica

3 - Servicing refrigerant circuit, which may only be performed at workshops with specially trained personnel (specialist repair workshop for air conditioning systems)

3.1 - Servicing refrigerant circuit, which may only be performed at workshops with specially trained personnel (specialist repair workshop for air conditioning systems)

3.2 - Tools

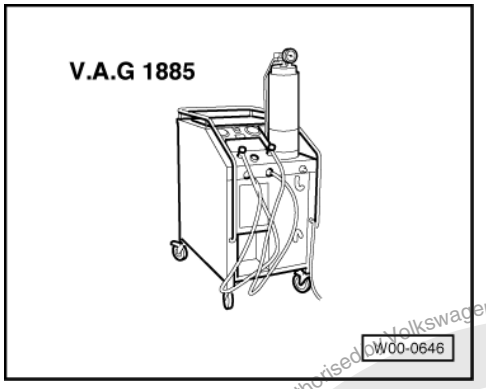

Special tools, workshop equipment, testers, measuring instruments and auxiliary items required

V.A.G 1885 Service station

- Scope of delivery: Quick action coupling adapters are included for the high and low pressure side service connections.

For further service stations => Binder Volkswagen Workshop Equipment.

Protected by copyright. Copying for private or commercial purposes, in part or in whole, is not permitted unless authorised by Volkswagen AG. Volkswagen AG does not guarantee or accept any liability with respect to the correctness of information in this document. Copyright by Volkswagen AG.
satelettronica

3.3 - Renewing refrigerant circuit components

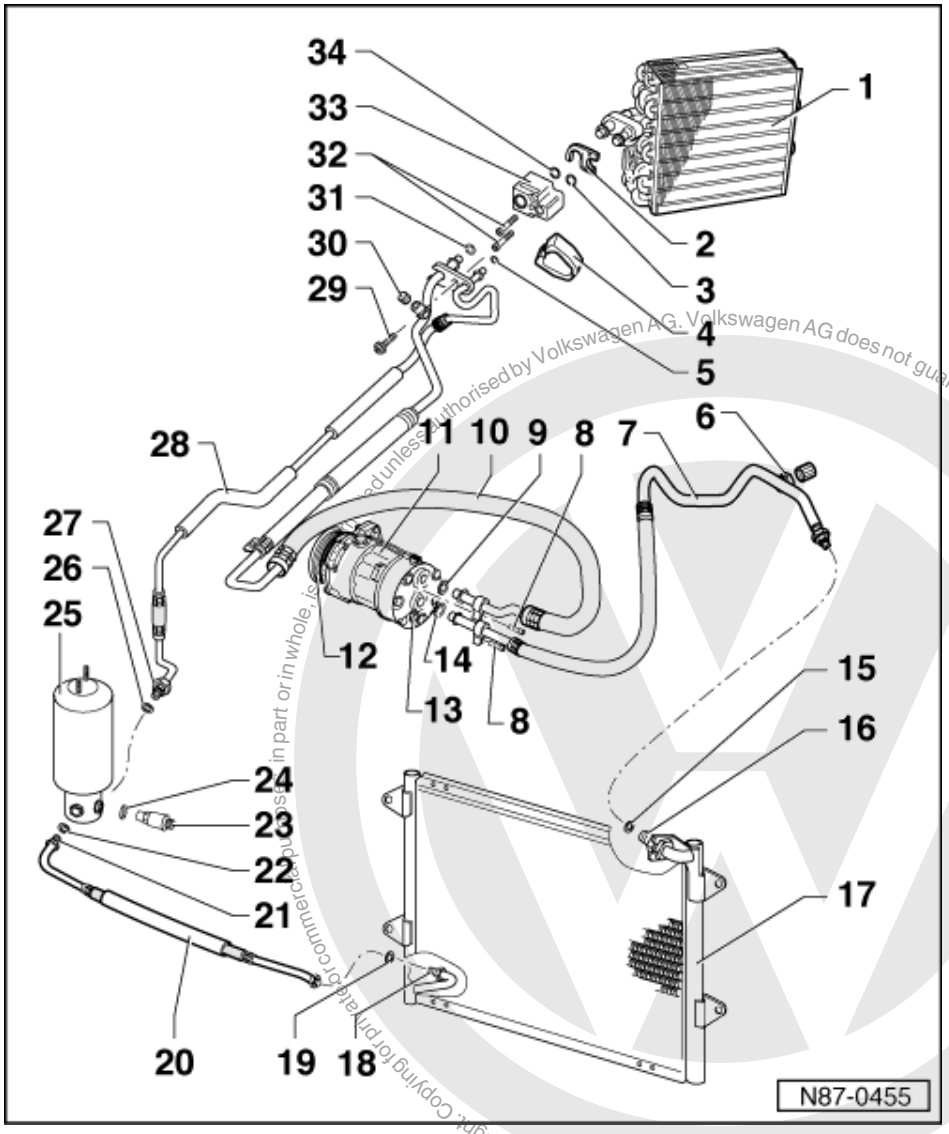

Notes:

- Refrigerant must be evacuated with Service station V.A.G 1885 first.
- The previously used service stations can still be used =>Binder Volkswagen Workshop Equipment.
- Safety measures when working on an evacuated refrigerant circuit =>Page 30 .
- All components of the refrigerant circuit which have been opened must be sealed with suitable plugs to prevent the ingress of humidity/moisture.
- The colour coding of O-rings for the R134a refrigerant circuits has been discontinued. Coloured and black O-rings are used.
- Only the components marked with an * can be replaced without opening and evacuating.

Protected by copyright. Copying for private or commercial purposes, in part or in whole, is not permitted unless authorised by Volkswagen AG. Volkswagen AG does not guarantee or accept any liability with respect to the correctness of information in this document. Copyright by Volkswagen AG.
satelettronica

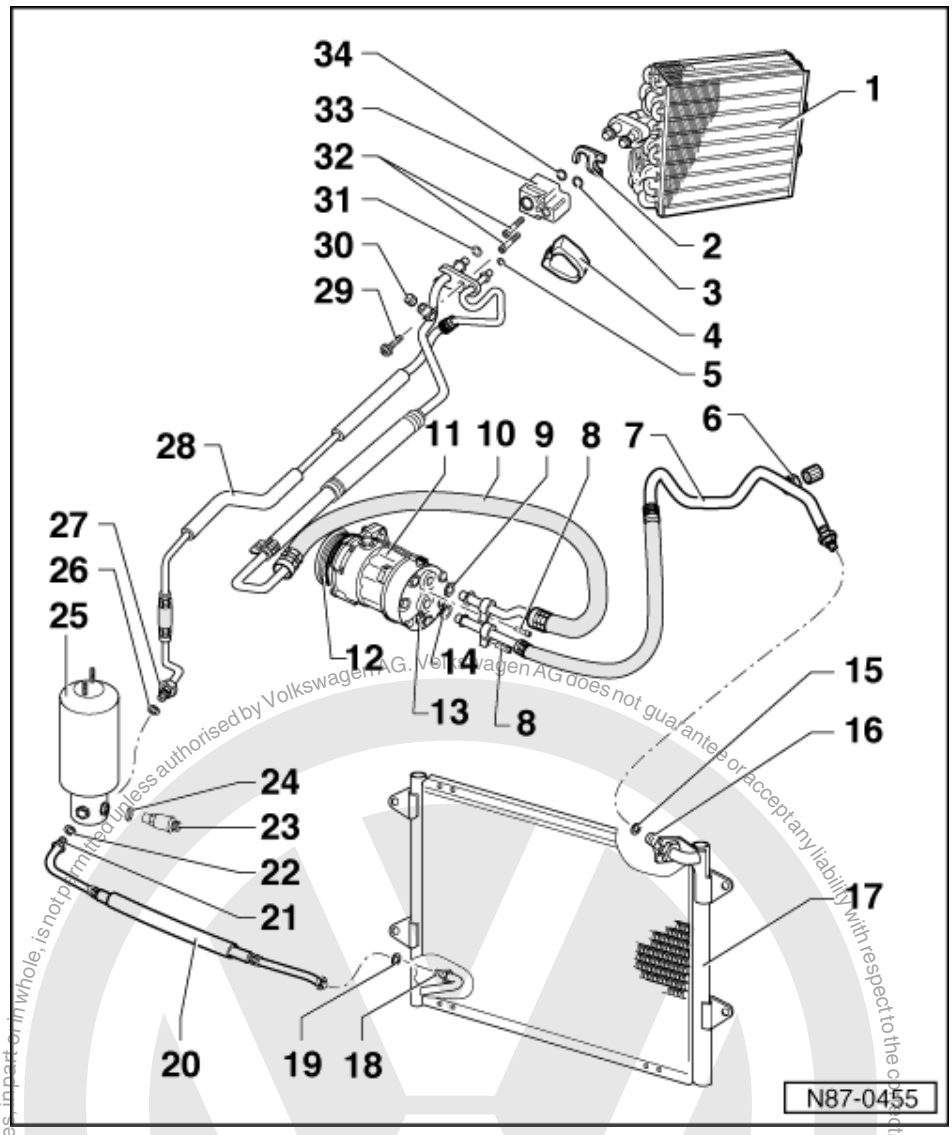

1 Evaporator
- In passenger compartment
- Removing => Page 88 , Dismantling and assembling housing

2 Threaded plate

3 O ring
- 10.8 mm; 1.85 mm

4 Heat insulation

5 O ring
- 7.6 mm; 1.82 mm

6 Evacuating and charging valve
- High pressure side
- Evacuating therefrigerant into the environment is a punishable offence.
- Removing and installing => Fig. 2
- Capacities => Page 99

satelettronica

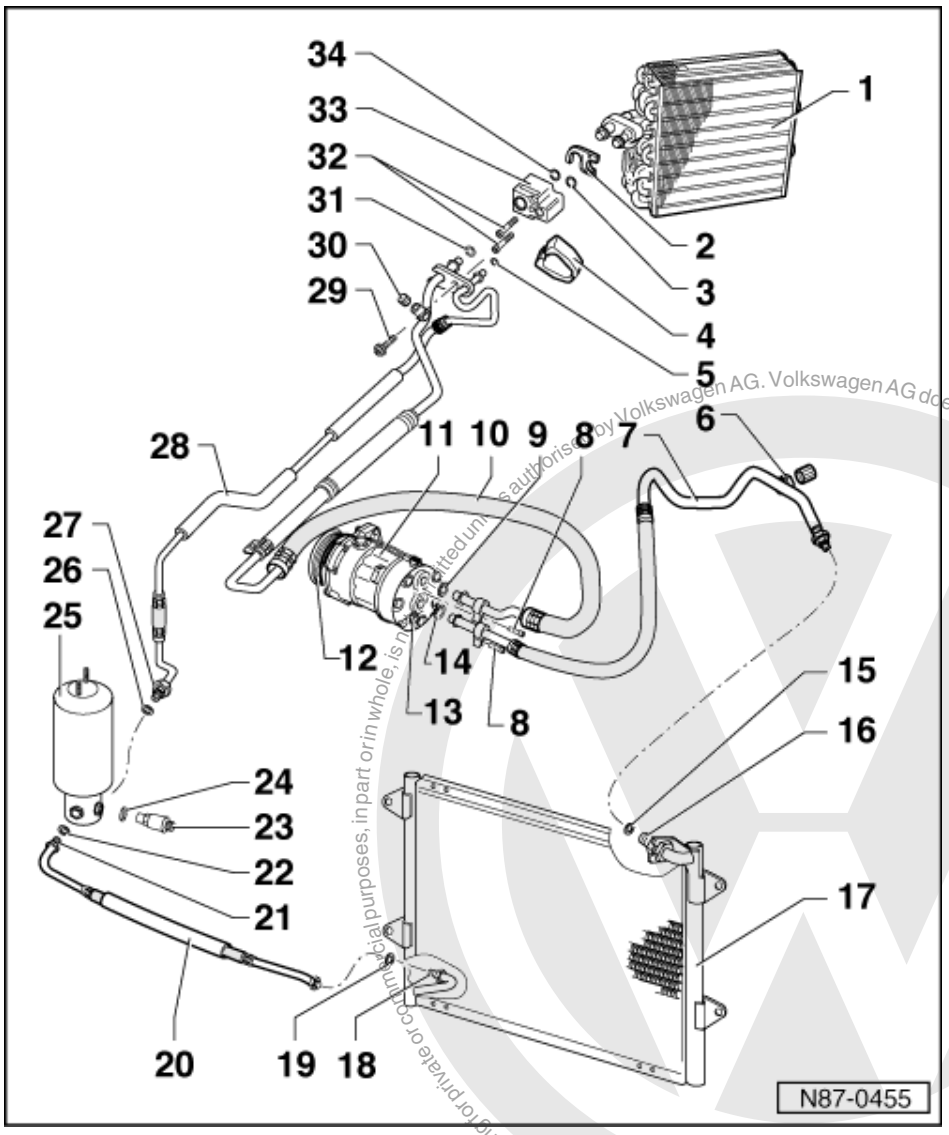

7 Refrigerant hose
- From compressor to condenser

8 Hexagon socket head combi-bolt
- 30 Nm

9 O ring
- 14.3 mm; 2.4 mm

10 Refrigerant hose
- From compressor to expansion valve

11 Compressor
- Manufacturer: Sanden
  Designation: SD7 - V16

Protected by copyright. Copyright for private or commercial purposes, in part or in whole, is not permitted unless authorised by Volkswagen AG. Volkswagen AG does not guarantee or accept any liability with respect to the correctness of information in this document. Copyright by Volkswagen AG.
satelettronica

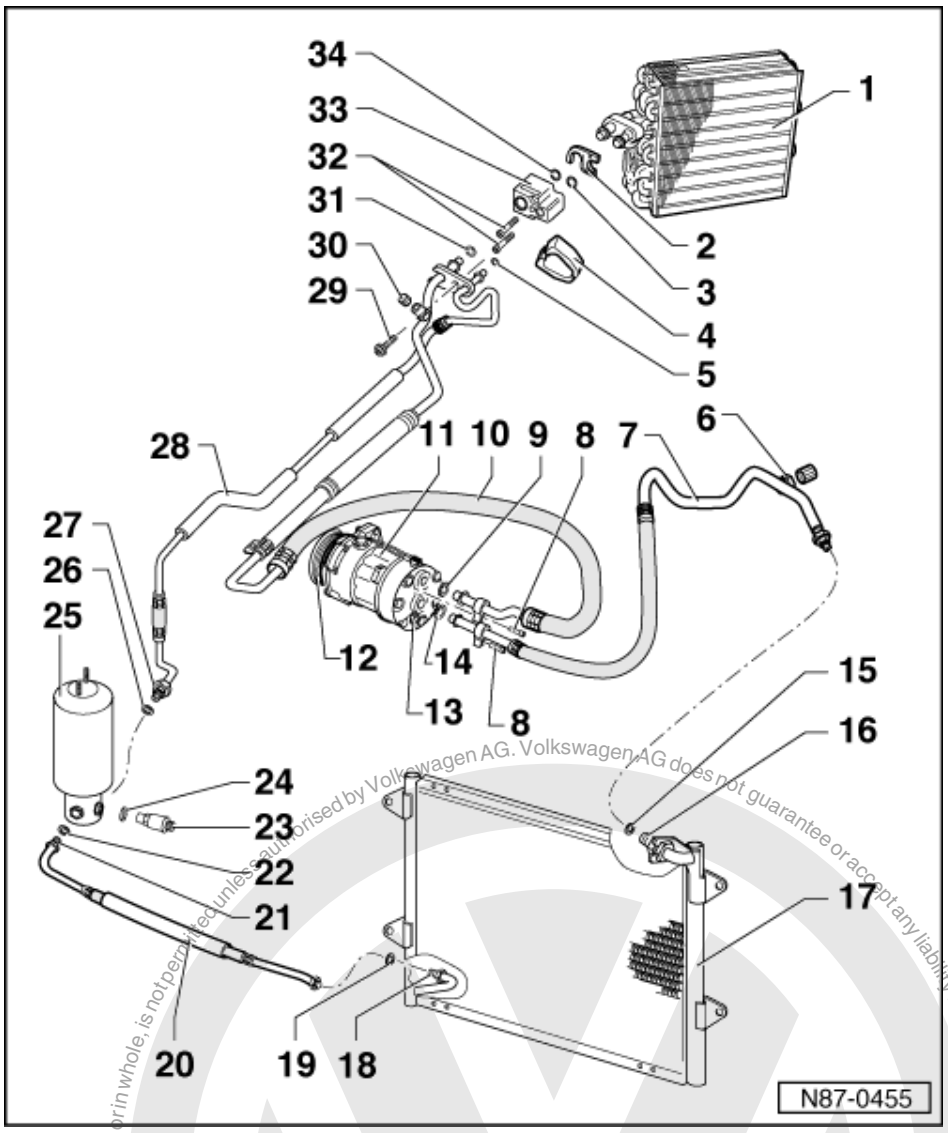

12 Compressor magnetic coupling -N25-

- Manufacturer: Sanden
  Carrying out repairs on the magnetic coupling, with the compressor installed, should only be undertaken in exceptional circumstances.
- Servicing magnetic coupling with compressor removed => Page 60

13 Pressure relief valve

- Checking => Fig. 4

14 O ring

- 10.8 mm; 1.82 mm

15 O ring

- 10.8 mm; 1.82 mm

16 3/4" thread - 16 UNF

- 35 Nm

17 Condenser

- Removing => Page 96

Protected by copyright. Copyright by Volkswagen AG.
Copyright by Volkswagen AG. Volkswagen AG does not guarantee or accept any liability with respect to the correctness of information in this document.
Reproduction, in whole or in part, is not permitted unless authorised by Volkswagen AG.
satelettronica

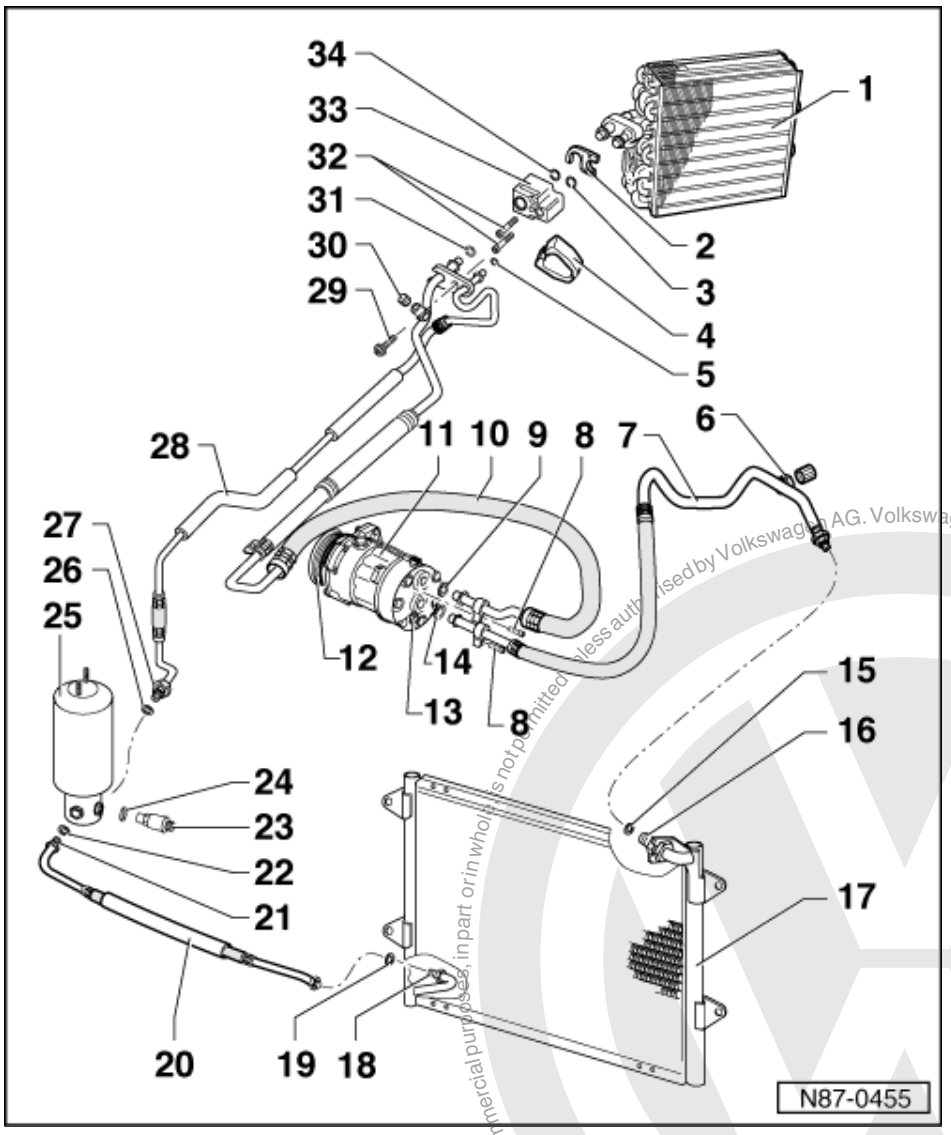

18 5/8" thread - 18 UNF
- 15 Nm

19 O ring
- 7.6 mm; 1.82 mm

20 Foam tube

21 3/4" thread - 16 UNF
- 35 Nm

22 O ring
- 10.8 mm; 1.82 mm

23 High pressure sender -G65-*
- Removing and installing:
- Removing => Page 52
- Tightening torque 8 Nm
- Renew O ring seal (note Part No.).

Protected by copyright. Copying for private or commercial purposes, in part or in whole, is not permitted unless authorised by Volkswagen AG. Volkswagen AG does not guarantee or accept any liability with respect to the correctness of information in this document. Copyright by Volkswagen AG.
satelettronica

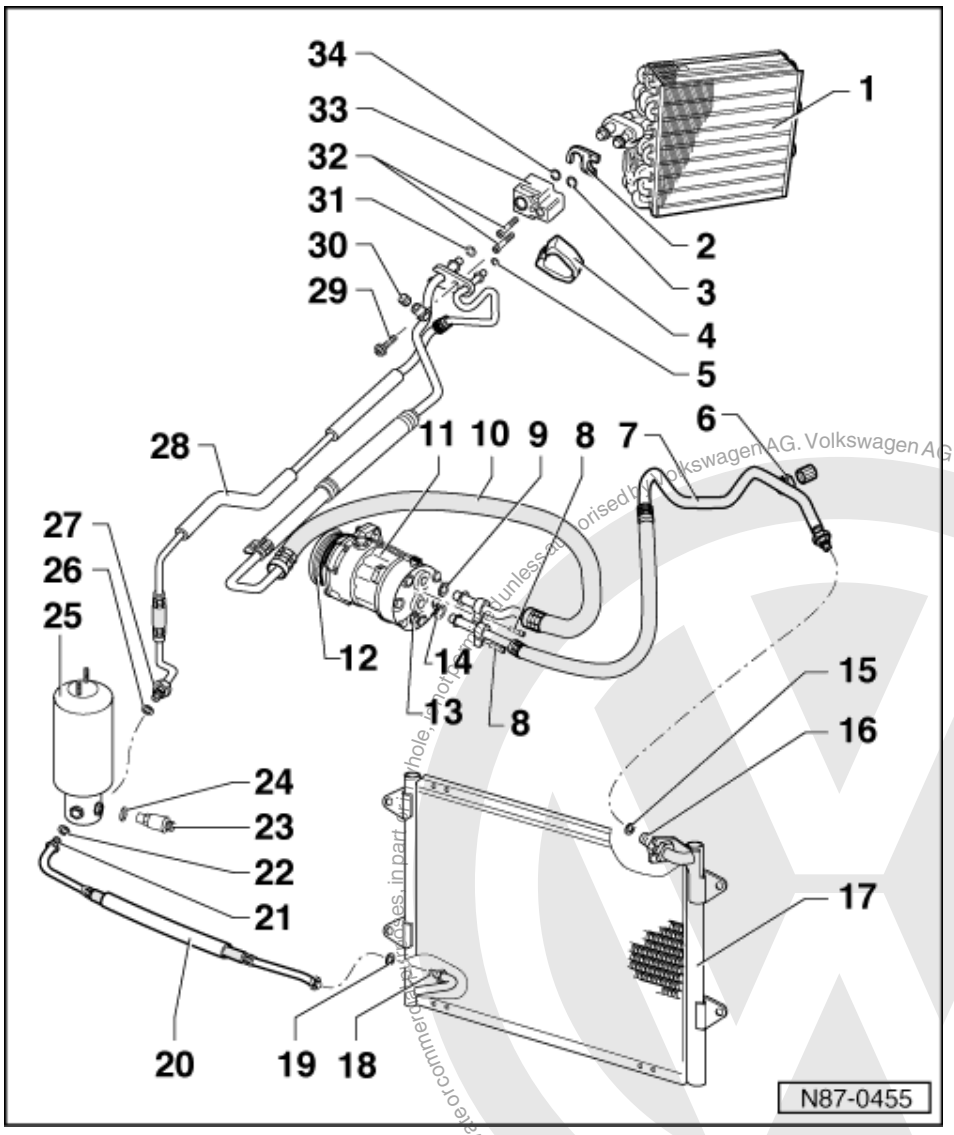

- The high pressure sender can be removed without evacuating the refrigerant system.
- The high pressure sender -G65- supplies information to the radiator fan control unit -J293- and to the engine control unit.
  Function:
- Switches radiator fan -V7- to next higher speed when pressure increases in refrigerant circuit.
- The high pressure sender -G65- can be checked via engine control unit self-diagnosis.
- Checking air conditioner high pressure sender -G65- => Page 81

Volkswagen AG. Volkswagen AG does not guarantee or accept any liability with respect to the correctness of information in this document. Copyright by Volkswagen AG.
satelettronica

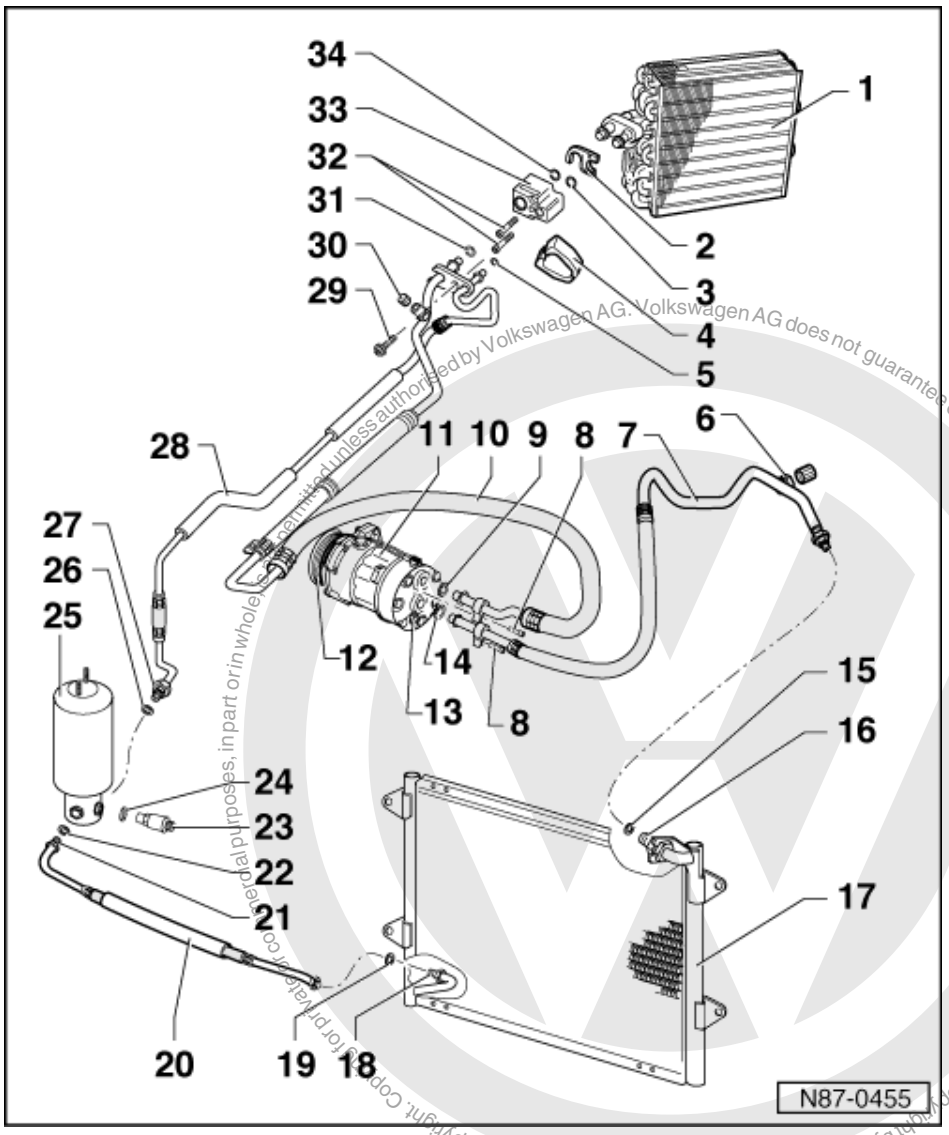

- Switches off conditioning system when pressure is excessive (for example, insufficient engine cooling).
- Switches off conditioning system when pressure is too low (for example, loss of refrigerant).

24 O ring
- 7.6 mm; 1.82 mm

25 Fluid container with drier
- Tasks => Fig. 3

26 O ring
- 10.8 mm; 1.82 mm

27 5/8" thread - 18 UNF
- 15 Nm

28 Refrigerant pipe

satelettronica

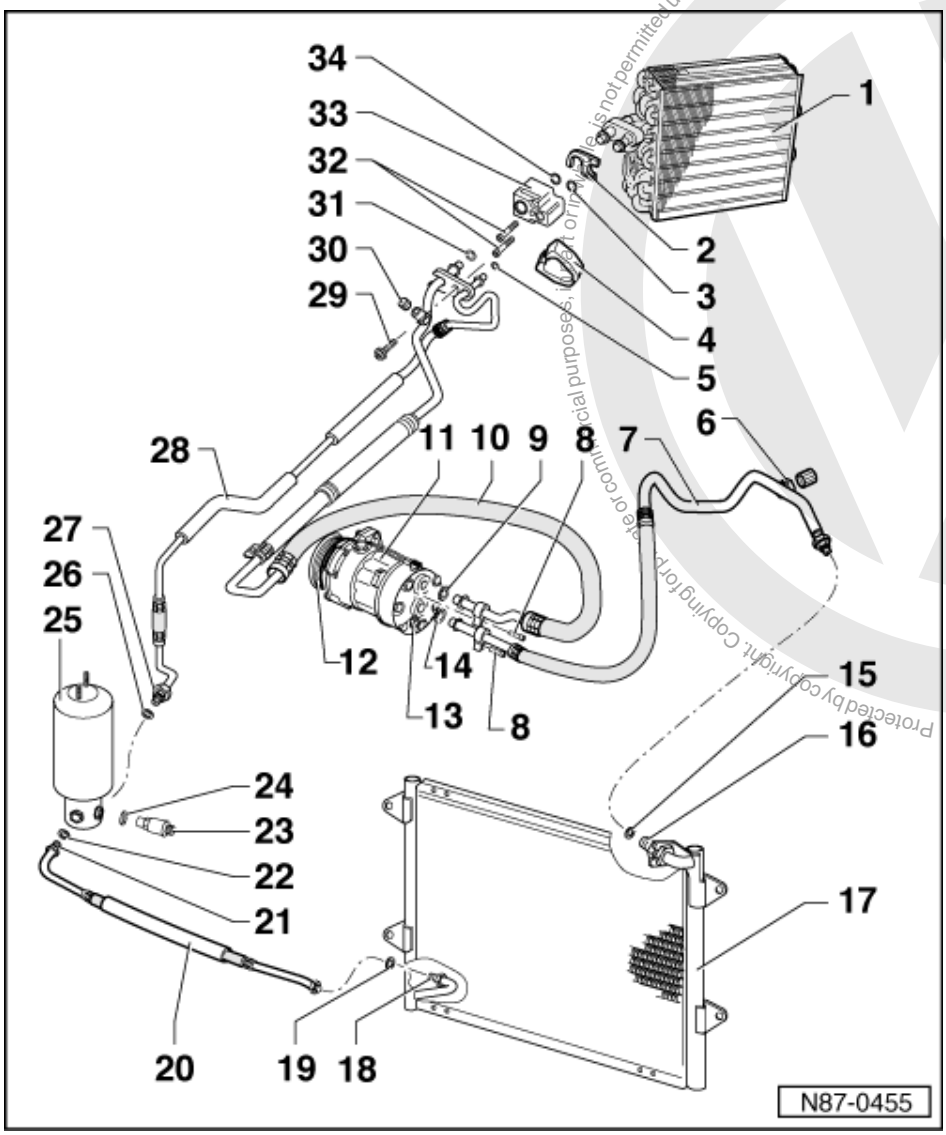

29 Hexagon socket head combi-bolt

- 7 Nm

30 Evacuating and charging valve

- Low pressure side
- Evacuating therefrigerant into the environment is a punishable offence.
- Removing and installing => Fig. 1
- Capacities => Page 99

31 O ring

- 17 mm; 1.85 mm

32 Bolt

- 8 Nm

33 Expansion valve

- Engine compartment right
- Opening must be sealed sufficiently to stop ingress of water
- Removing => Page 92

Protected by copyright. Copying for private or commercial purposes, in part or in whole, is not permitted unless authorised by Volkswagen AG. Volkswagen AG does not guarantee or accept any liability with respect to the correctness of information in this document. Copyright by Volkswagen AG.
satelettronica

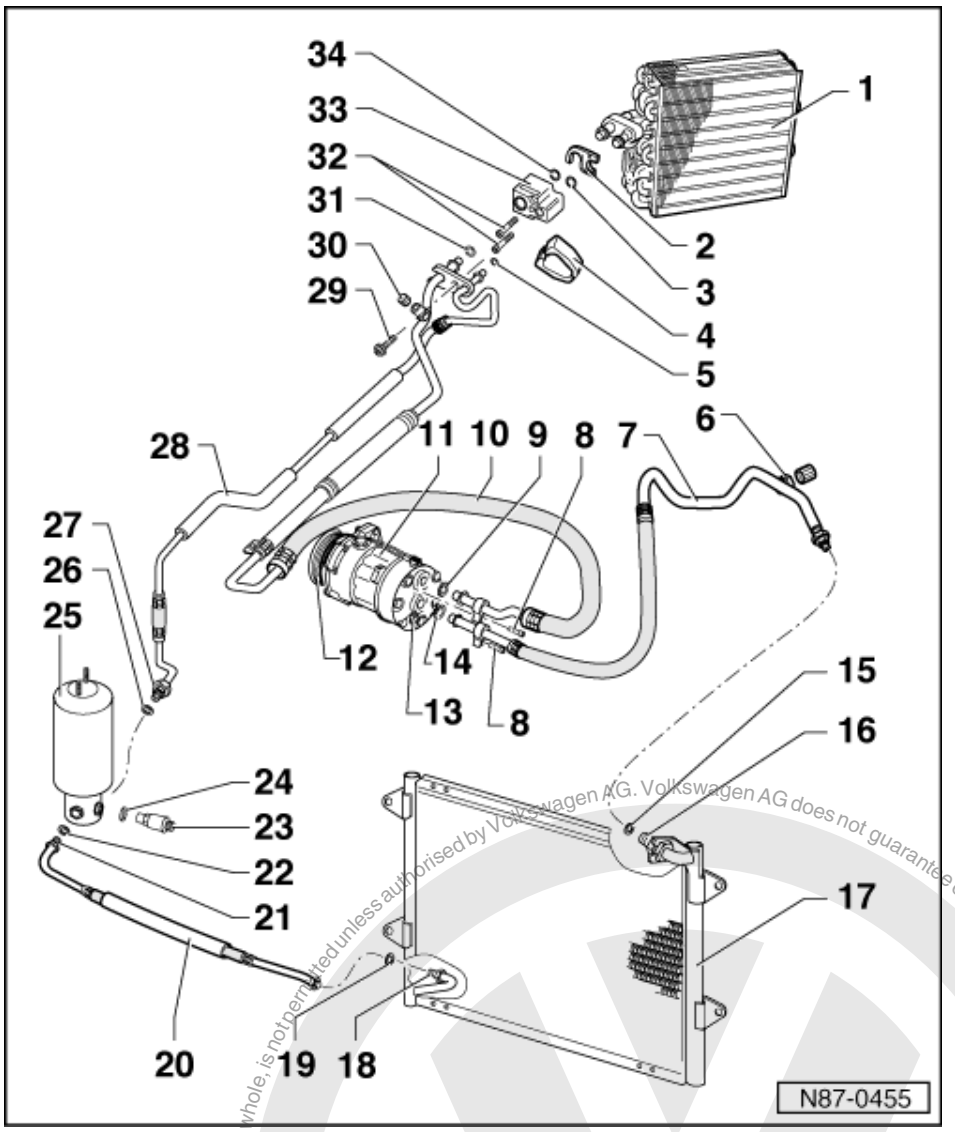

Function

- The expansion valve atomizes the instreaming refrigerant and regulates the through flow so that the vapour, depending on temperature, becomes a gas only on reaching the outlet side of the evaporator.
- The expansion valves for R134a refrigerant circuits are marked with a green sticker.

34 O ring

- 14 mm; 1.82 mm

Protected by copyright. Copying for private or commercial purposes, in part or in whole, is not permitted unless authorised by Volkswagen AG. Volkswagen AG does not guarantee or accept any liability with respect to the correctness of information in this document. Copyright by Volkswagen AG.
satelettronica

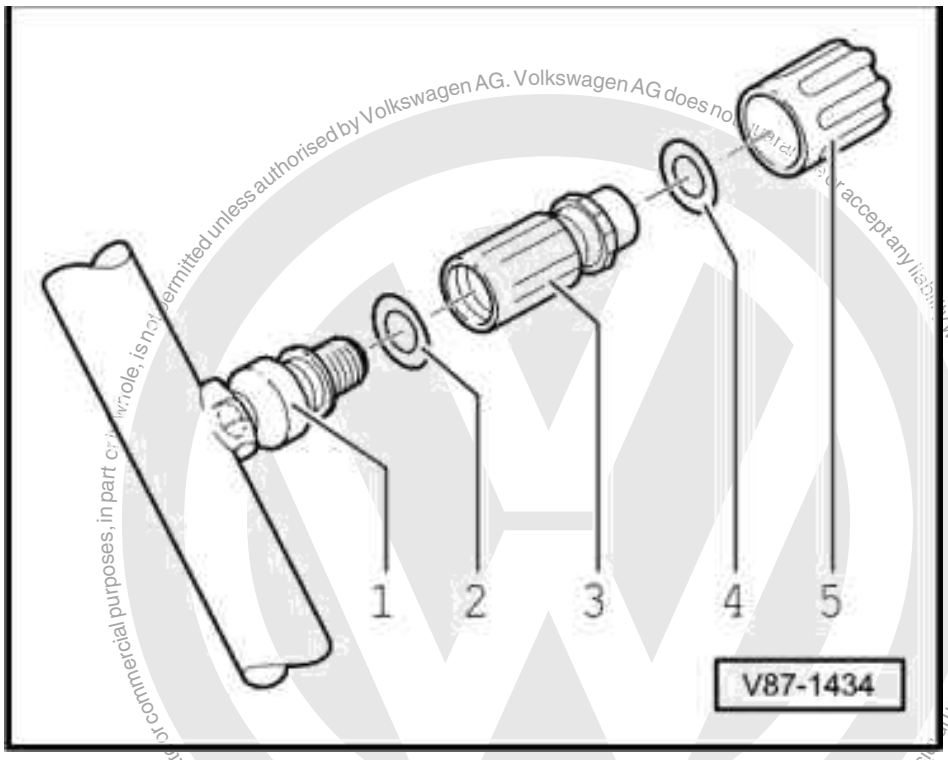

-> Fig.1 Removing evacuating and charging valve, low pressure side

- Extract refrigerant circuit with Service station V.A.G 1885 and then renew the valve -3-.

Notes:

- Draining the refrigerant into the environment is a punishable offence.
- To prevent the ingress of dampness all components of the refrigerant circuit which have been opened must be sealed with suitable plugs.

1 - Connection with external thread and groove for O-ring
2 - O-ring
7.6 mm; 1.82 mm
3 - Extraction and filling valve
4 - O-ring
5 - Cap

Protected by copyright. Copying for private or commercial purposes, in part or whole, is not permitted unless authorised by Volkswagen AG. Volkswagen AG does not guarantee or accept any liability with respect to the correctness of information in this document. Copyright by Volkswagen AG.

satelettronica

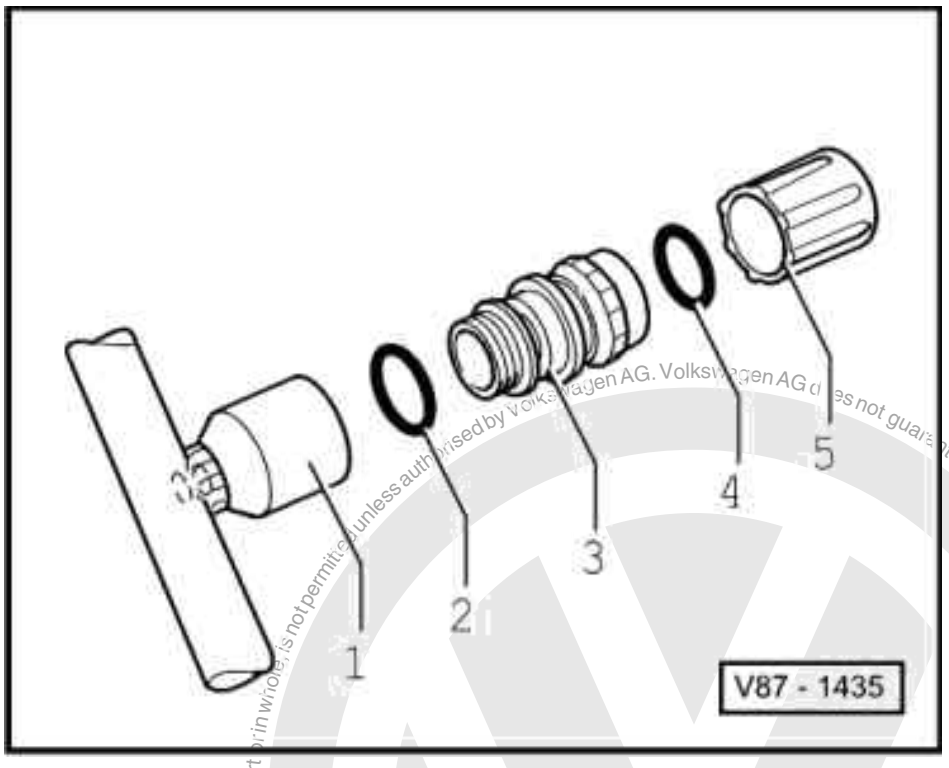

-> Fig.2 Removing evacuating and charging valve, high pressure side

- Extract refrigerant circuit with Service station V.A.G 1885 and then renew the valve -3-.

Notes:

- Draining the refrigerant into the environment is a punishable offence.
- To prevent the ingress of dampness all components of the refrigerant circuit which have been opened must be sealed with suitable plugs.

1 - Connection with internal thread
2 - O-ring
10.8 mm; 1.82 mm
3 - Extraction and filling valve with groove and internal thread for cap.
4 - O-ring
5 - Cap

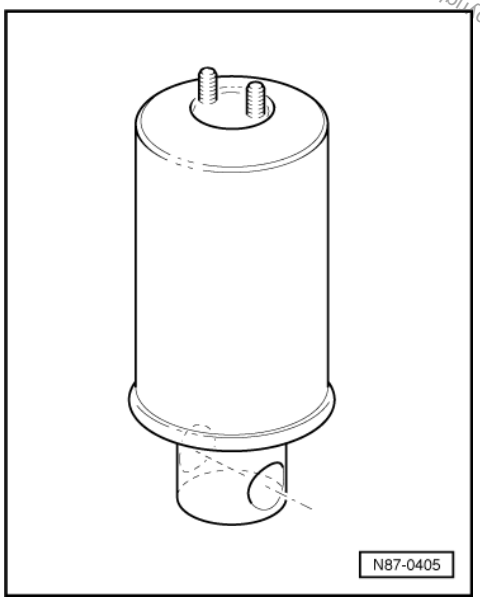

Protected by copyright. Copying for private or commercial purposes, in part or in whole, is not permitted unless authorised by Volkswagen AG. Volkswagen AG does not guarantee or accept any liability with respect to the correctness of information in this document. Copyright by Volkswagen AG.
satelettronica

-> Fig.3 Purpose of the fluid reservoir with drier

The fluid reservoir collects the liquid droplets and guides them in a continuous stream to the expansion valve. Moisture, which has entered the refrigerant circuit during assembly is collected by the dryer in the reservoir.

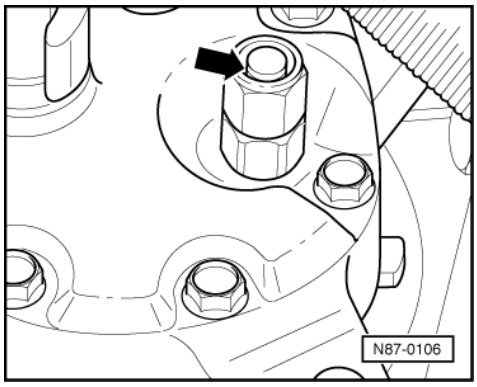

-> Fig.4 Checking pressure relief valve on compressor

- Task: protects refrigerant circuit against over-pressure
- The pressure relief valve tell-tale indicates if valve has opened. An attached adhesive plate -arrow- is pushed out.

Protected by copyright. Copying for private or commercial purposes, in part or in whole, is not permitted unless authorised by Volkswagen AG. Volkswagen AG does not guarantee or accept any liability with respect to the correctness of information in this document. Copyright by Volkswagen AG.
satelettronica

3.4 - Checking high pressure sender -G65-

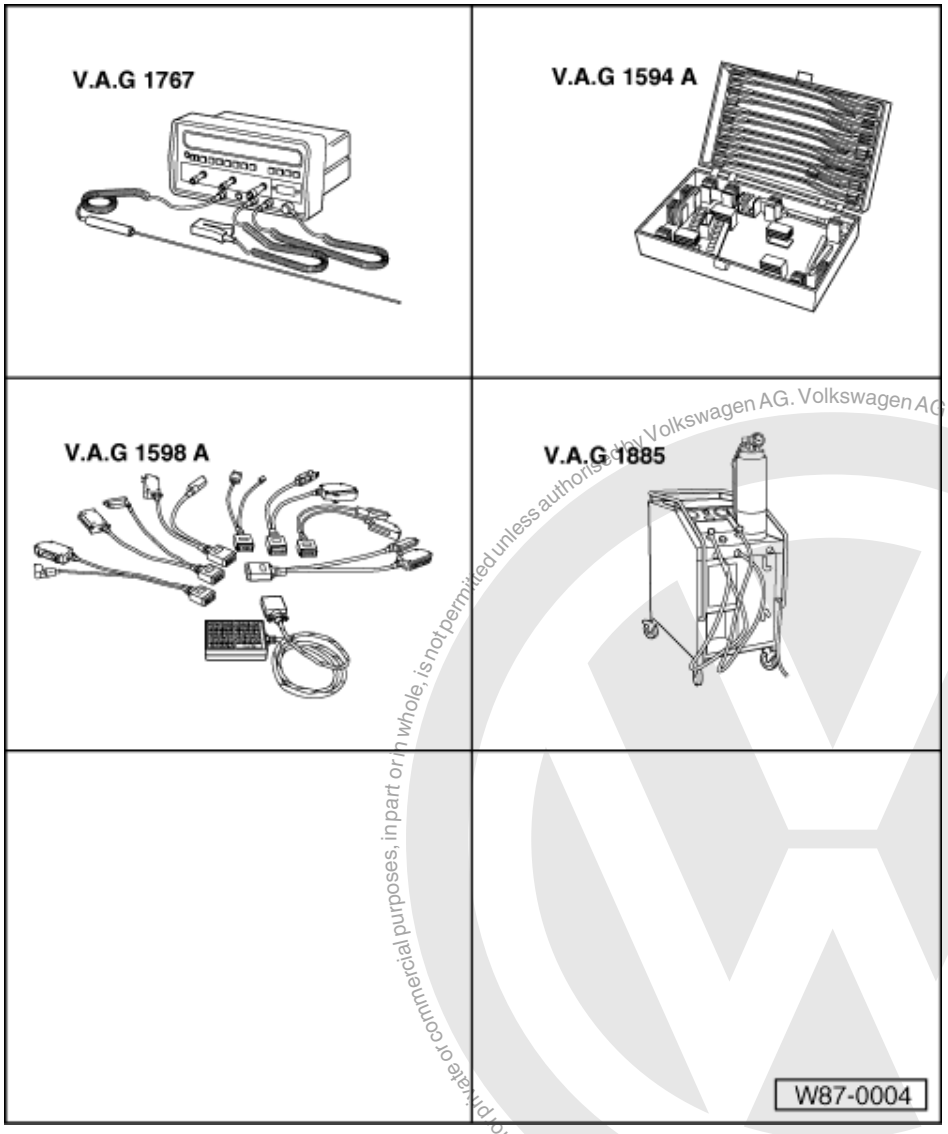

Protected by copyright. Copying for private or commercial purposes, in part or in whole, is not permitted unless authorised by Volkswagen AG. Volkswagen AG does not guarantee or accept any liability with respect to the correctness of information in this document. Copyright by Volkswagen AG.

satelettronica

Special tools, testers, measuring instruments and auxiliary items required

These tools and equipment are required to determine if the high pressure sender -G65- is defective or not.

If your workshop is a designated service support point with specially trained personal for air conditioning systems, then a service station (e.g. V.A.G 1885) can additionally be used to establish if the refrigerant circuit is, empty, partially charged, charged correctly.

Checking high pressure sender -G65- via engine control unit

Depending on the signal from the high pressure sender-G65-, the engine control unit will, via the radiator fan control unit -J293-,

- Switch on magnetic coupling -N25-
- Switch off magnetic coupling -N25-
- Switch radiator fan -V7- to second speed if pressure is rising.
- Increase idling speed when air conditioner is switched on.

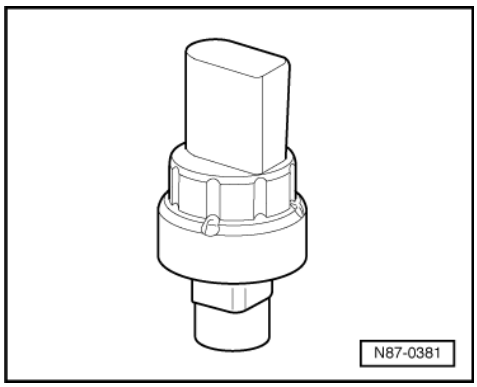

Notes:

- -> The high pressure sender can be removed without the refrigerant first being evacuated.
- The high pressure sender -G65- sends information to the engine control unit and radiator fan control unit.
- The high pressure sender -G65- can only be checked via the engine control unit self-diagnosis.

- Perform check of high pressure sender -G65- via the engine control unit self-diagnosis using V.A.G 1551 (engine not running) =>Repair group 01; Self-diagnosis; Reading measured value block 08; Display group 057 (value 4 in %). Compare value with table => Page 84

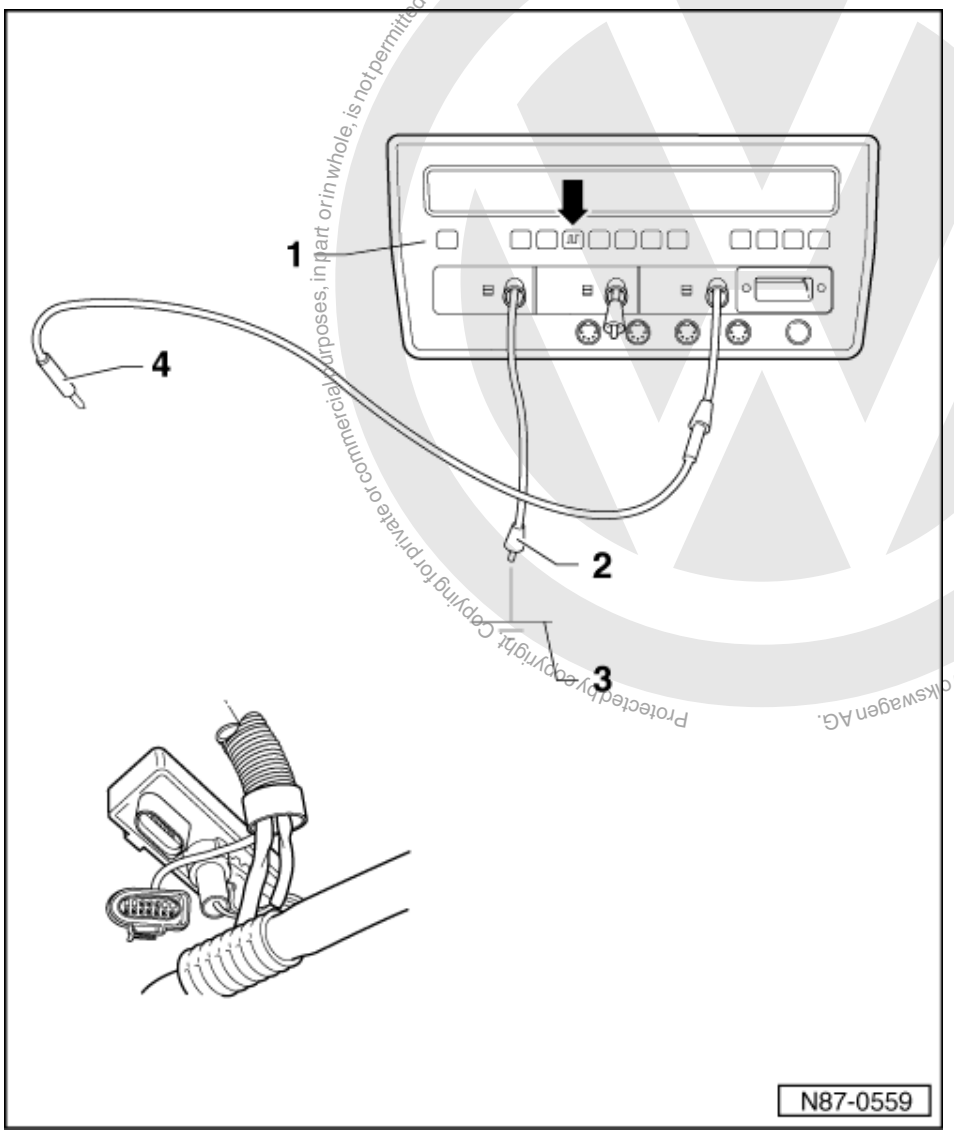

satelettronica

Checking high pressure sender -G65- with ignition tester V.A.G 1767

Note:

This test is to be performed on vehicles for which self-diagnosis via the engine control unit is not possible.

Assembling tools and equipment

- Connect ignition tester V.A.G1767 -1-. Connect tester earth (black grip) -2- to vehicle earth -3-. Using a cable from adapter set V.A.G1594A, establish a connection -4- to connector T14/2 of radiator fan control unit -J293-.

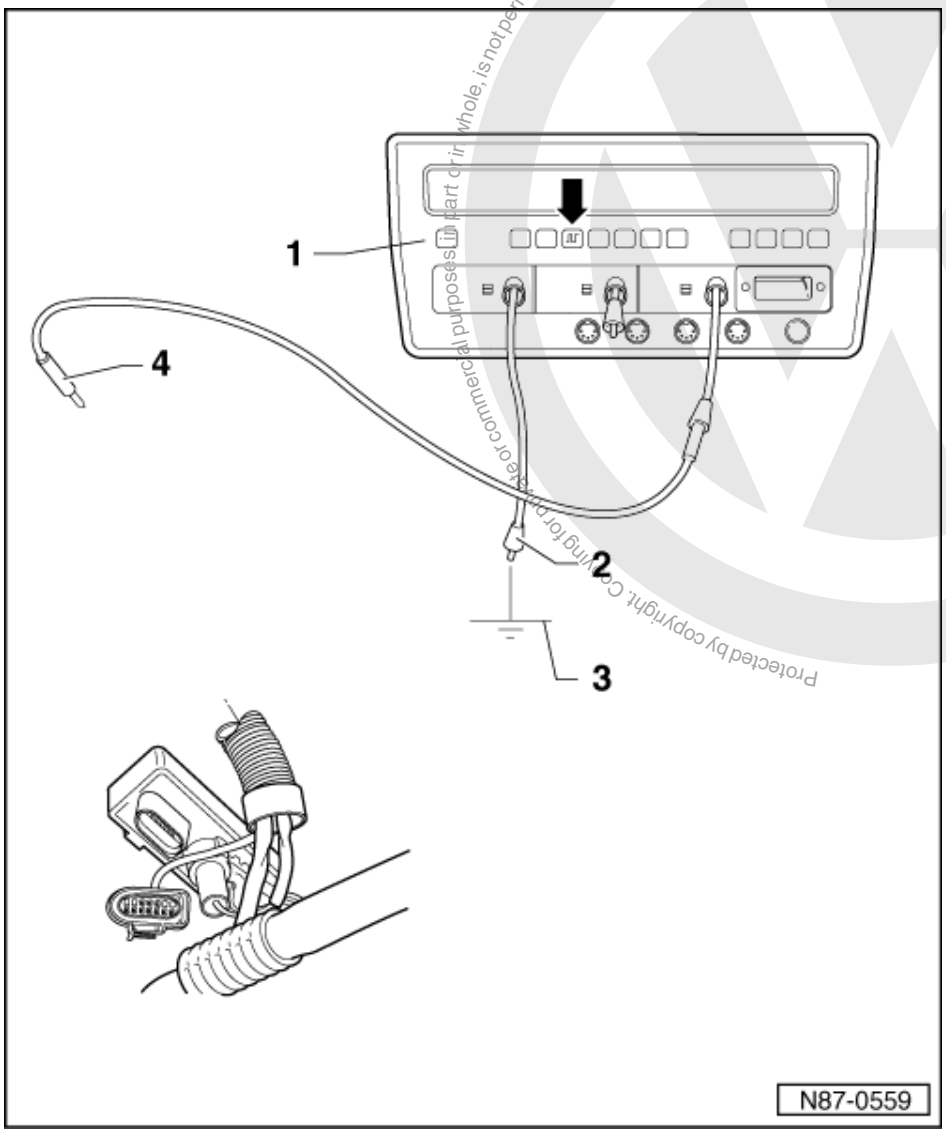

Checking:

- Switch ignition on.
- Press button (arrow) for modulation ratio on ignition tester V.A.G 1767.
- Compare value with table => Page 84

Protected by copyright. Copying for private or commercial purposes, in part or in whole, is not permitted unless authorised by Volkswagen Aktiengesellschaft. Volkswagen AG does not guarantee or accept any liability with respect to the correctness of information in this document. Copyright by Volkswagen AG.
satelettronica

Evaluating test results:

A workshop temperature of between 20°C to 30°C is assumed for the evaluation. The engine is at room temperature.

Test result	Possible cause of fault	Fault rectification
Modulation ratio 20% to 25%	High pressure sender -G65- is OK.	-
Modulation ratio 90%	High pressure sender -G65- defective	Renew (refrigerant need not be emptied)
Modulation ratio 5%	uHigh pressure sender -G65- defective uRefrigerant circuit is empty	uRenew (refrigerant need not be emptied) uCharge refrigerant circuit, =>Page 99

Note:

If the cause of the fault cannot be located, then seek further in the fault memories of the engine control unit.

Measurements to assess the air conditioning system

Prerequisites:

- Thermo-switch for radiator fan -F18- is OK.

=> 4-Cyl. engine, mechanics; Repair group 19; Parts of cooling system body side. Parts of cooling system body side.

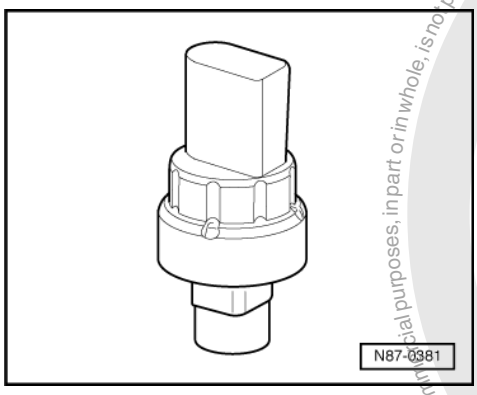

-> The following tests are to be performed with high pressure sender -G65- installed.

Note:

The compressor will not switch on if the high pressure sender -G65- has been removed or the connector on the high pressure sender -G65- has been pulled off.

The following measurements must be performed to determine the performance of the air conditioning system:

- Check condition of filling, the air conditioner system is switched off when pressure is too low (for example when refrigerant is lost).
- Check blower switch-on, the radiator fan -V7- is switched to the next highest speed when pressure in the refrigerant circuit rises.

Protected by copyright. Copying for private or commercial purposes, in part or in whole, is not permitted unless authorised by Volkswagen AG. Volkswagen AG does not guarantee or accept any liability with respect to the correctness of information in this document. Copyright by Volkswagen AG.
satelettronica

- Check air conditioner switch-off, the air conditioner is switched off when pressure is excessive (for example when engine cooling is insufficient).

3.5 - Removing and installing heater and air conditioner

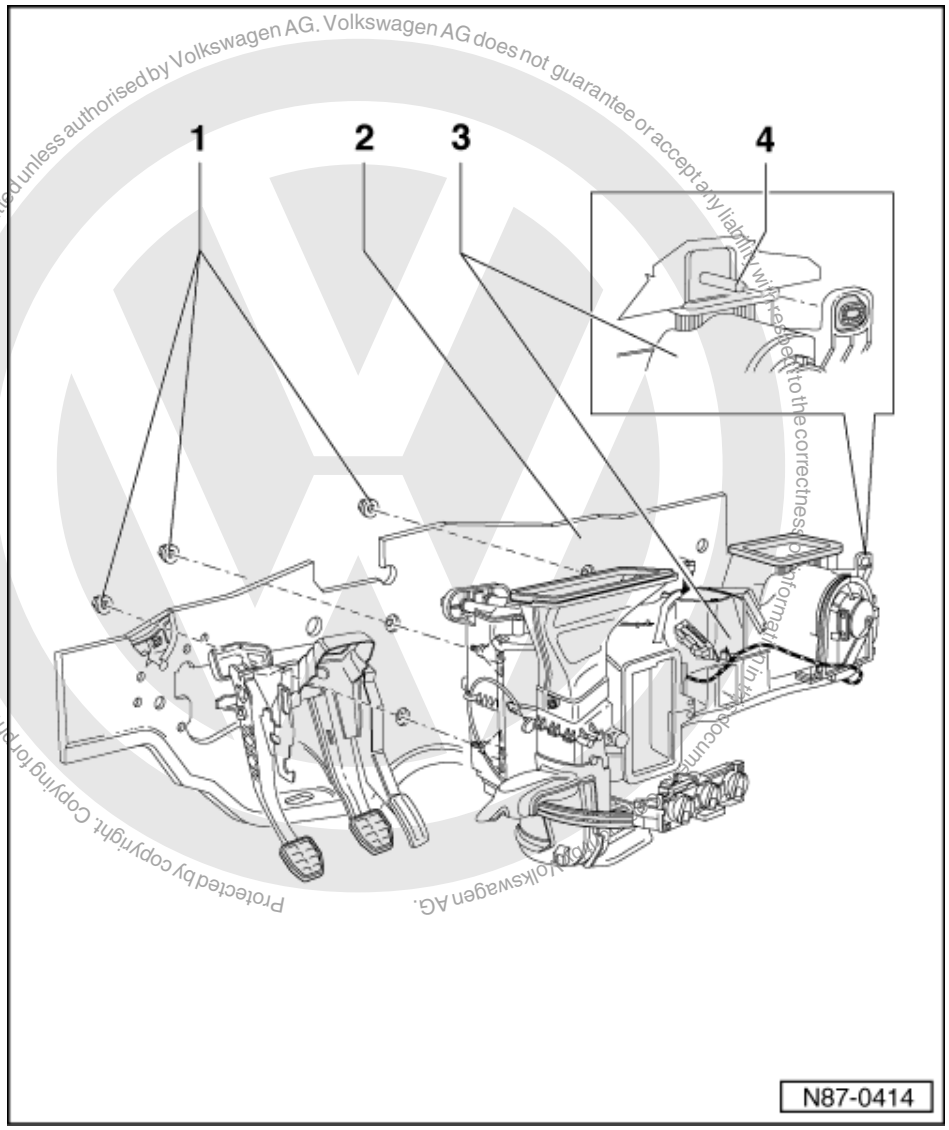

Protected by copyright. Copying for private or commercial purposes, in part or in whole, is not permitted unless authorised by Volkswagen AG. Volkswagen AG does not guarantee or accept any liability with respect to the correctness of information in this document. Copyright by Volkswagen AG.

satelettronica

Warning!
Always disconnect the battery earth strap before working on the electrical system.

Notes:

- Obtain radio anti-theft coding before disconnecting the battery.
- Check vehicle equipment (radio, clock, electric windows) as per Workshop Manual and/or Owner's Manual when reconnecting the battery.
- Refrigerant must be evacuated with Service station V.A.G 1885 first.

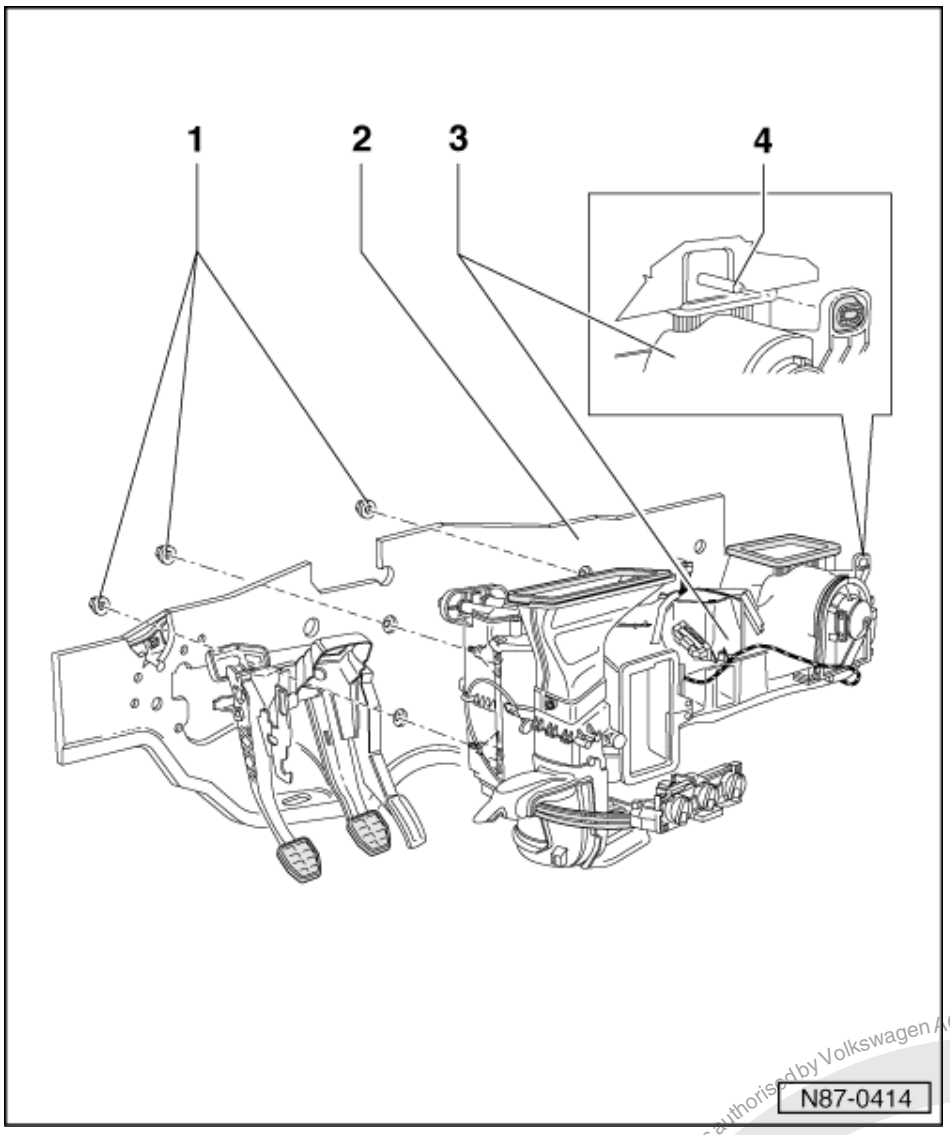

- The previously used service stations can still be used =>Binder Volkswagen Workshop Equipment.
- All components of the refrigerant circuit which have been opened must be sealed with suitable plugs to prevent the ingress of humidity/moisture.

Removing

Perform following work first:

- Remove dash panel

=> General body repairs, interior; Repair Group 70; Removing and installing dash panel Removing and installing dash panel

- Clamp off coolant hoses in engine compartment and disconnect from heat exchanger.
- Seal heat exchanger to prevent coolant from running out
- Remove dust and pollen filter together with filter housing =>Page 7 .

1 Hexagon nut

- Qty. 3
- 4 Nm

satelettronica
Protected by copyright. Copying for private or commercial purposes, in part or in whole, is not permitted unless authorised by Volkswagen AG. Volkswagen AG does not guarantee or accept any liability with respect to the correctness of information in this document. Copyright by Volkswagen AG

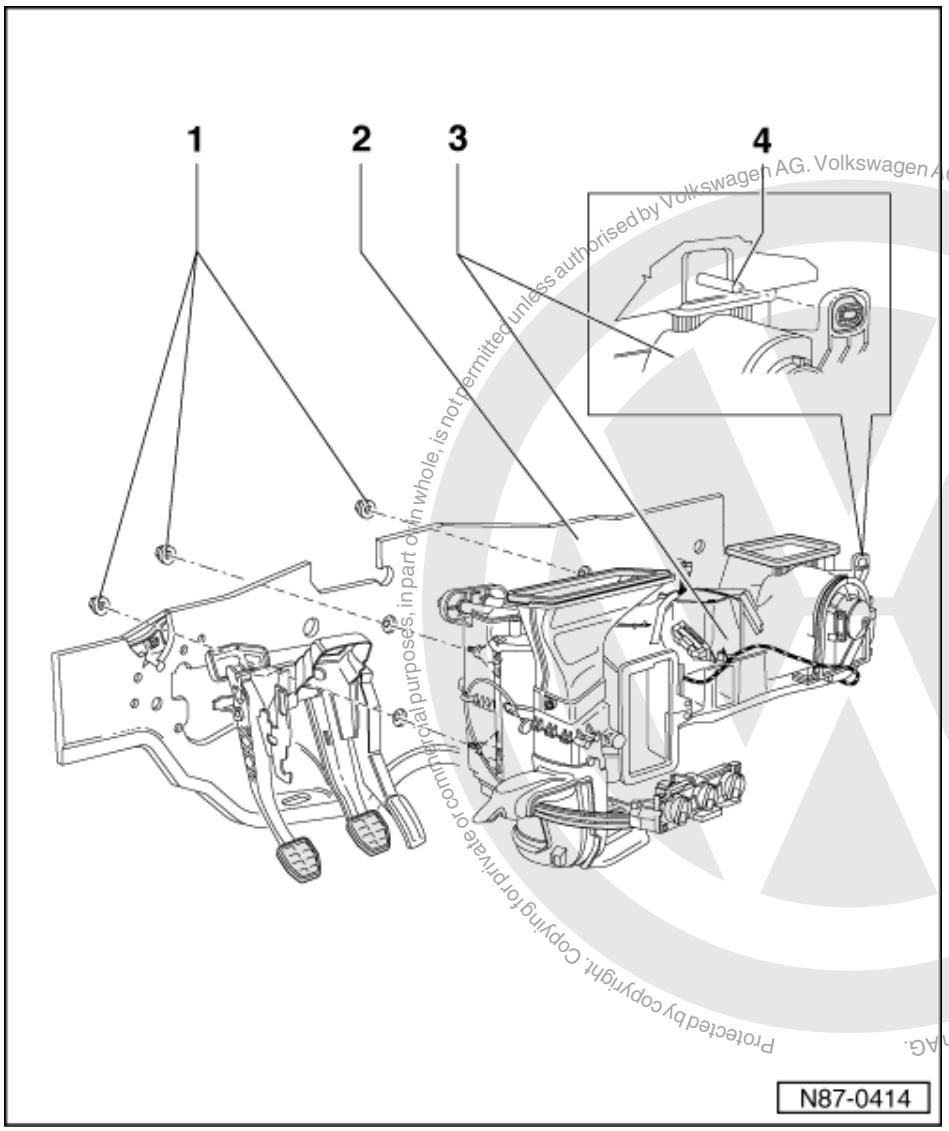

Protected by copyright. Copying for private or commercial purposes, in part or in whole, is not permitted unless authorised by Volkswagen AG. Volkswagen AG does not guarantee or accept any liability with respect to the correctness of information in this document. Copyright by Volkswagen AG.

satelettronica

2 Bulkhead
3 Heater and air conditioner
- Dismantling and assembling evaporator housing =>Page 88

4 Guide pin

Installing

- Place the heater and air conditioner against the bulkhead and push the threaded studs through the corresponding holes.
- At the same time ensure the heater and air conditioner is sitting firmly on the guide pin -item 4 -.
- Fit nuts onto studs from engine compartment and tighten onto bulkhead.
- Check coolant level and top up.

3.6 - Dismantling and assembling evaporator housing

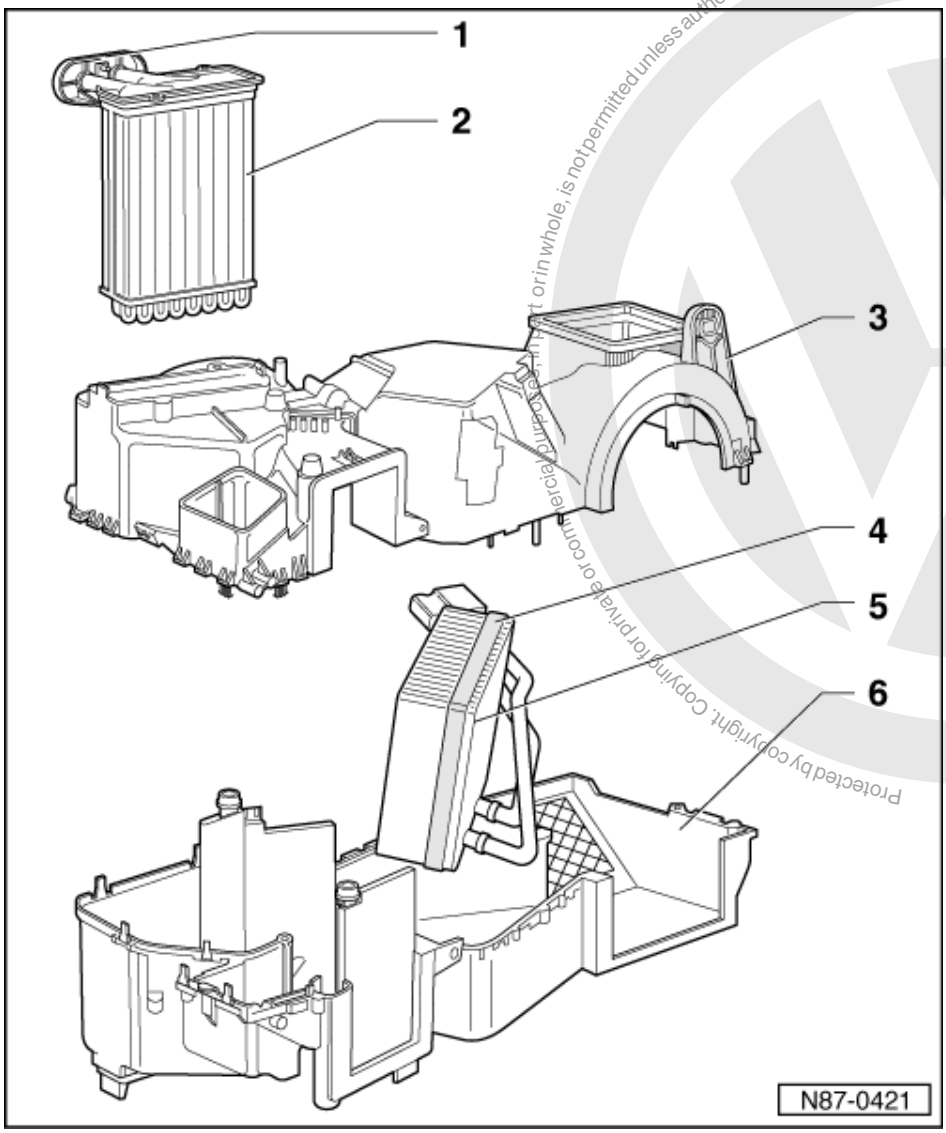

Warning!
Always disconnect the battery earth strap before working on the electrical system.

Notes:

- Check vehicle equipment (radio, clock, electric windows) as per Workshop Manual and/or Owner's Manual when reconnecting the battery.
- Refrigerant must be evacuated with Service station V.A.G 1885 first.
- The previously used service stations can still be used =>Binder Volkswagen Workshop Equipment.

Protected by copyright. Copying for private or commercial purposes, in part or in whole, is not permitted unless authorised by Volkswagen AG. Volkswagen AG does not guarantee or accept any liability with respect to the correctness of information in this document. Copyright by Volkswagen AG.
satelettronica

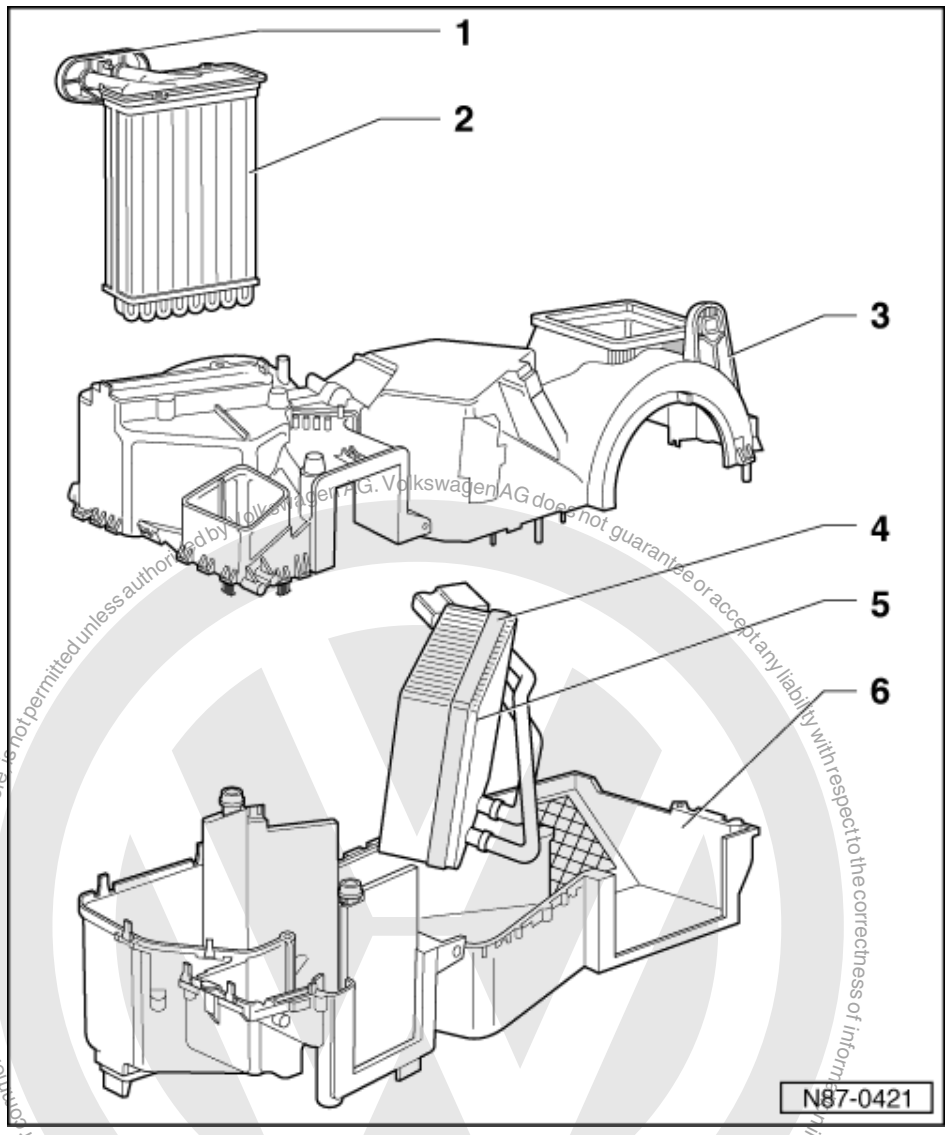

◆ To prevent the ingress of dampness all components of the refrigerant circuit which have been opened must be sealed with suitable plugs.

Perform following work first:

- Extract refrigerant with Service station V.A.G 1885.

Notes:

Draining the refrigerant into the environment is a punishable offence.

- Drain coolant.
- Remove dash panel.

=> General body repairs, interior; Repair Group 70; Removing and installing dash panel Removing and installing dash panel

- Remove heater and air conditioner unit.

Protected by copyright. Copyright by Volkswagen AG. Volkswagen AG does not guarantee or accept any liability with respect to the correctness of information in this document. Copying for private or commercial purposes, in part or in whole, is not permitted unless authorised by Volkswagen AG.
satelettronica

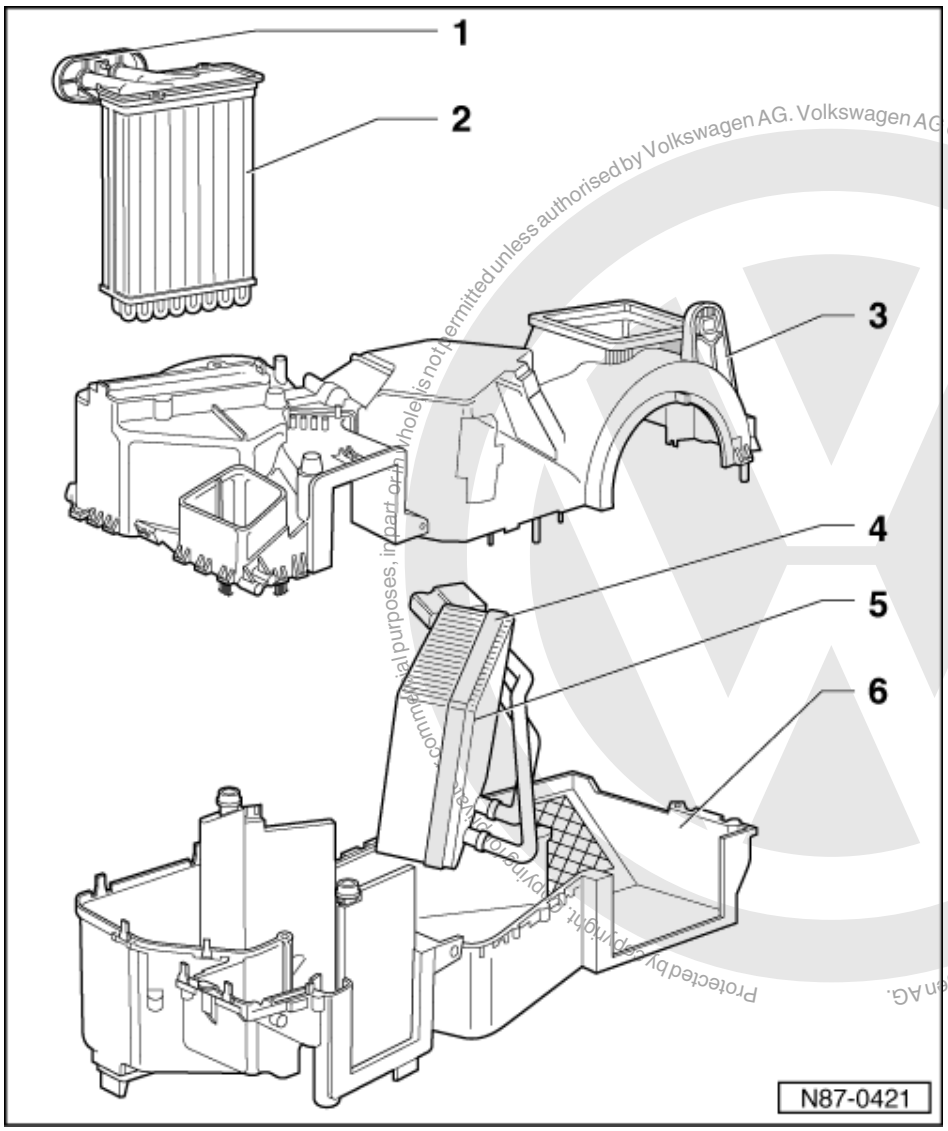

Protected by copyright. Copyright by Volkswagen AG. Volkswagen AG does not guarantee or accept any liability with respect to the correctness of information in this document. Copyright by Volkswagen AG. commercial purposes, in part or in whole is not permitted unless authorised by Volkswagen AG.

satelettronica

1 Heat exchanger/bulkhead seal
2 Heat exchanger
- After removal renew complete coolant

3 Housing, upper part
- With fresh air and recirculating air flap

4 Gasket
- Installing seal on evaporator =>Fig. 1

5 Evaporator
- Installing seal on evaporator connection =>Fig. 2

6 Housing, lower part

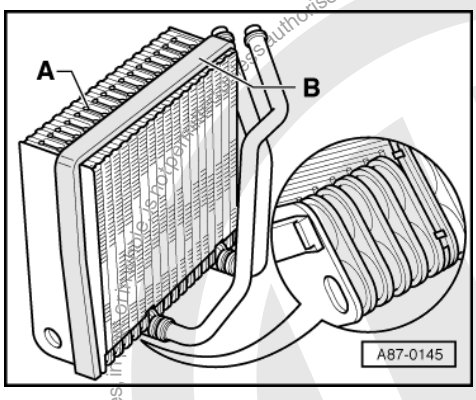

-> Fig.1 Installing seal on evaporator

The evaporator -A- must be sealed against the housing at top and sides with gasket -B-.

Note:

To ensure that the condensed water can drain properly, the bottom side of the evaporator must not be fitted with a gasket.

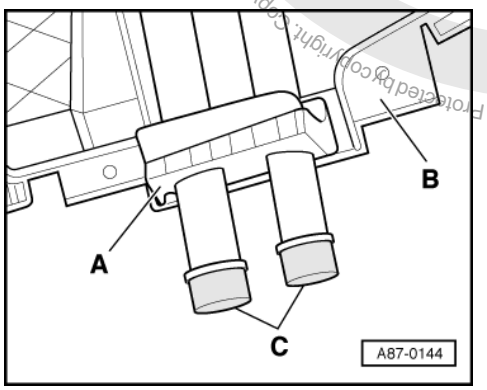

-> Fig.2 Installing seal on evaporator connection

The refrigerant pipes -C- must be sealed against both housing sections -B- with gasket -A-.

Protected by copyright. Copying for private or commercial purposes is not permitted unless authorised by Volkswagen AG. Volkswagen AG does not guarantee or accept any liability with respect to the correctness of information in this document. Copyright by Volkswagen AG.
satelettronica

3.7 - Removing expansion valve

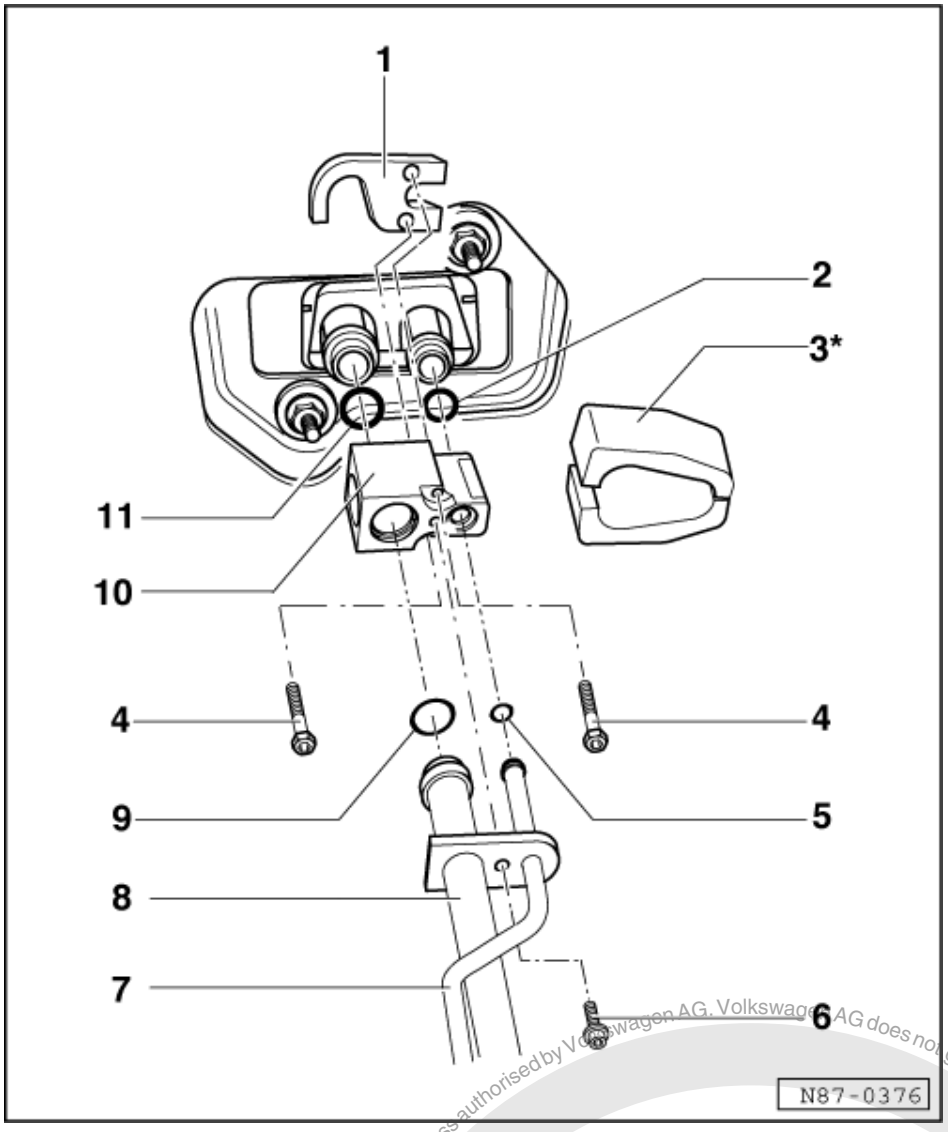

Notes:

- Refrigerant must be evacuated with Service station V.A.G 1885 first.
- The previously used service stations can still be used =>Binder Volkswagen Workshop Equipment.
- Only the components marked with an * can be replaced without opening and evacuating.
- To prevent the ingress of dampness all components of the refrigerant circuit which have been opened must be sealed with suitable plugs.
- The colour coding of O-rings for the R134a refrigerant circuits has been discontinued. Coloured and black O-rings are used.

satelettronica
Protected by copyright. Copying for private or commercial purposes, in part or in whole, is not permitted unless authorised by Volkswagen AG. Volkswagen AG does not guarantee or accept any liability with respect to the correctness of information in this document. Copyright by Volkswagen AG.

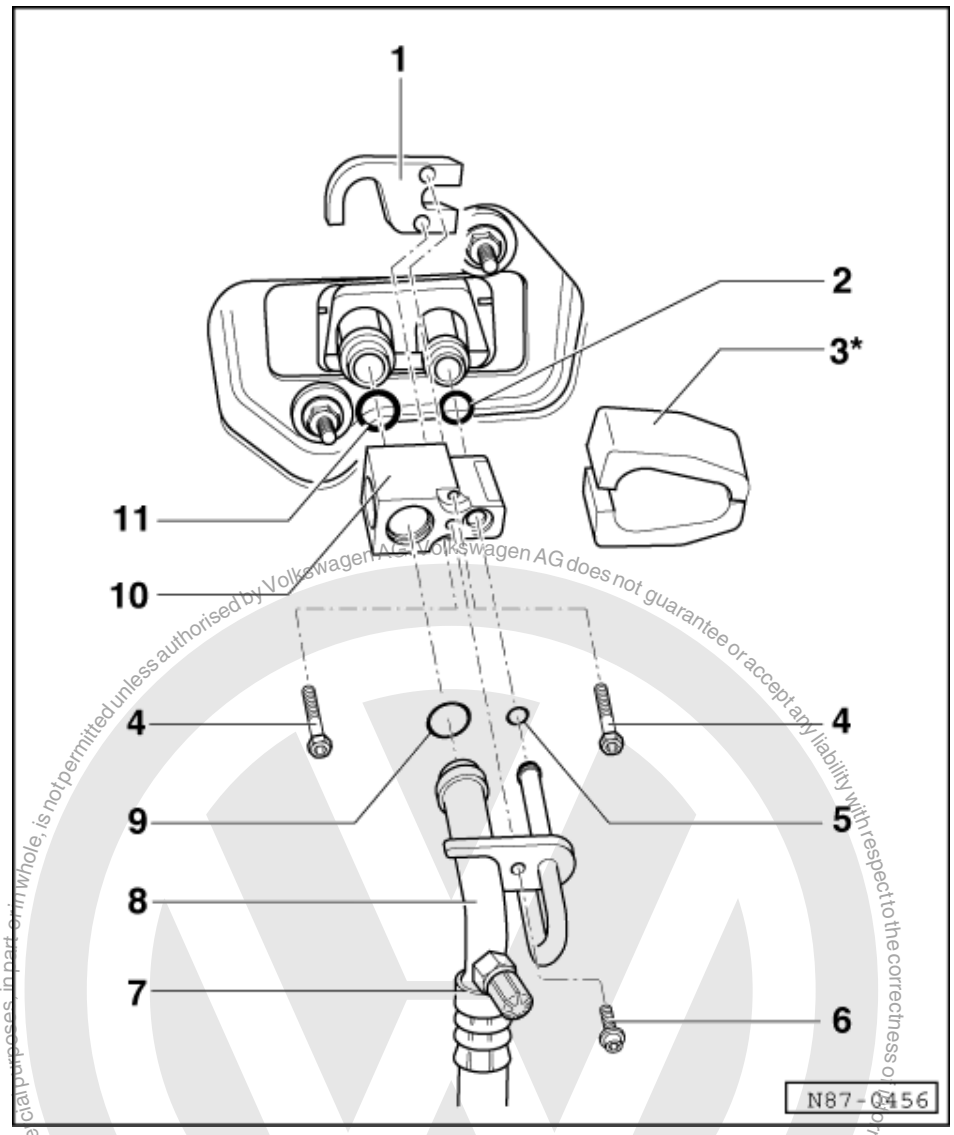

1 Threaded plate
2 O ring
- 10.8 mm; 1.85 mm

3 Heat insulation*
4 Bolts
- 8 Nm
- Qty. 2

5 O ring
- 7.6 mm; 1.82 mm

6 Bolt
- 8 Nm

7 Refrigerant pipe
- From fluid container with drier to expansion valve

satelettronica

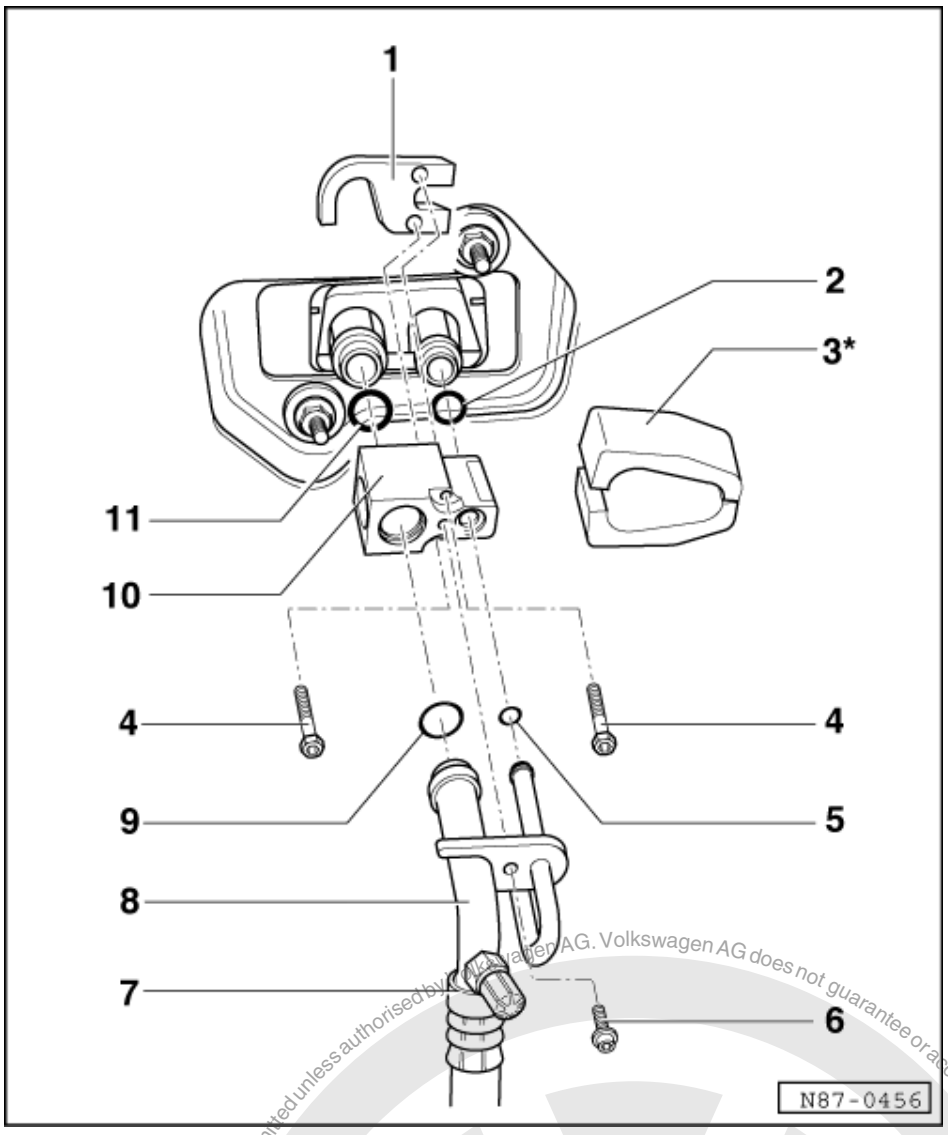

8 Refrigerant hose
- From expansion valve to compressor
- With damper

9 O ring
- 17 mm; 1.85 mm

10 Expansion valve
- Engine compartment right
- Opening must be sealed sufficiently to stop ingress of water

11 O ring
- 14 mm; 1.82 mm

Protected by copyright. Copying for private or commercial purposes, in part or in whole, is not permitted unless authorised by Volkswagen AG. Volkswagen AG does not guarantee or accept any liability with respect to the correctness of information in this document. Copyright by Volkswagen AG.
satelettronica

Protected by copyright. Copyright by Volkswagen AG. Volkswagen AG does not guarantee or accept any liability with respect to the correctness of information in this document. Copying for private or commercial purposes, in part or in whole, is not permitted unless authorised by Volkswagen AG.

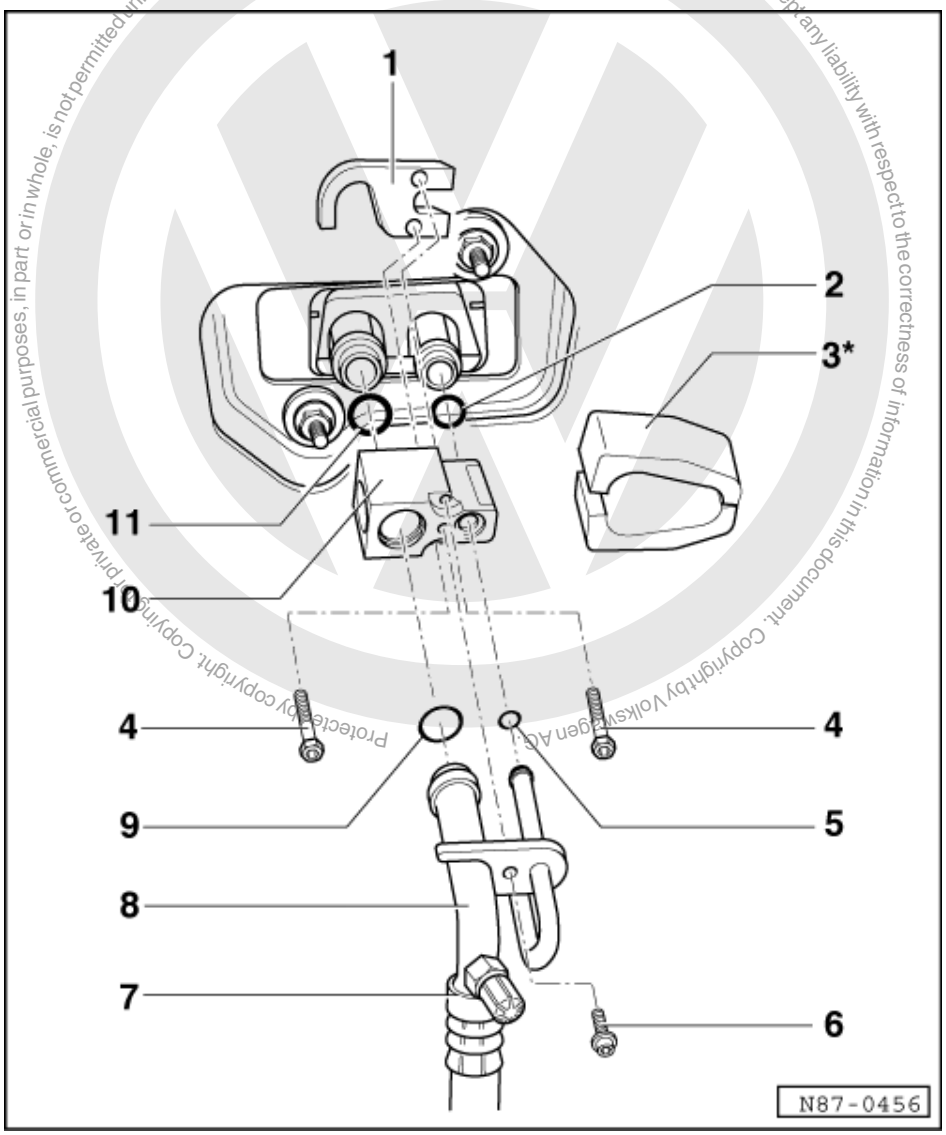

Removing

Note:

Draining the refrigerant into the environment is a punishable offence.

- Remove heat insulation - 4 -.
- Remove bolt - 6 -.
- Pull out refrigerant pipe - 7 - and refrigerant hose - 8 -.

◆ Renew O rings - 5 - and - 9 -.

- Remove bolts - 4 -.
- Remove expansion valve - 10 -.

◆ Renew O rings - 2 - and - 11 -.

satelettronica

3.8 - Removing and installing condenser

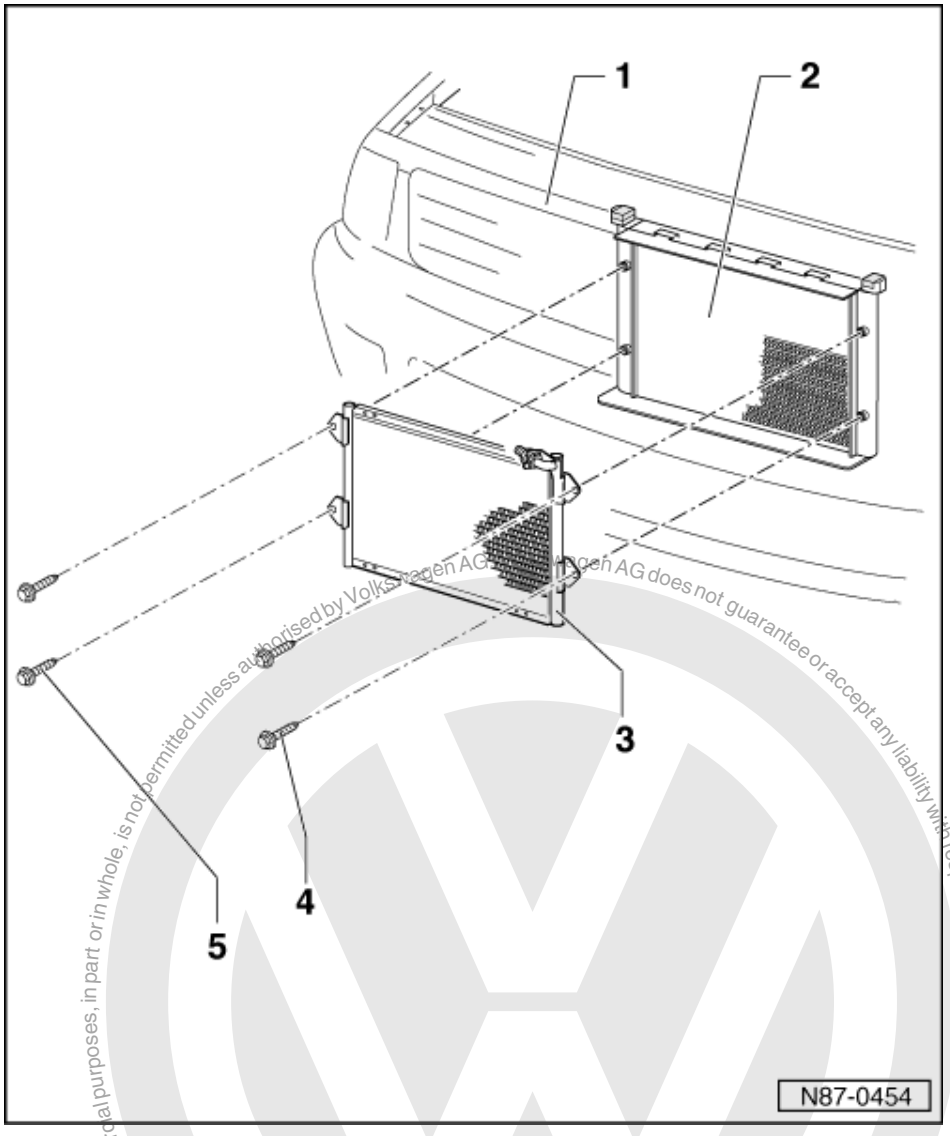

Warning!
Always disconnect the battery earth strap before working on the electrical system.

Notes:

- Obtain radio anti-theft coding before disconnecting the battery.
- Check vehicle equipment (radio, clock, electric windows) as per Workshop Manual and/or Owner's Manual when reconnecting the battery.
- Refrigerant must be evacuated with Service station V.A.G 1885 first.
- The previously used service stations can still be used =>Binder Volkswagen Workshop Equipment.

Copyright by Volkswagen AG. Volkswagen AG does not guarantee or accept any liability with respect to the correctness of information in this document. Copying for private or commercial purposes, in part or in whole, is not permitted unless authorised by Volkswagen AG.
satelettronica

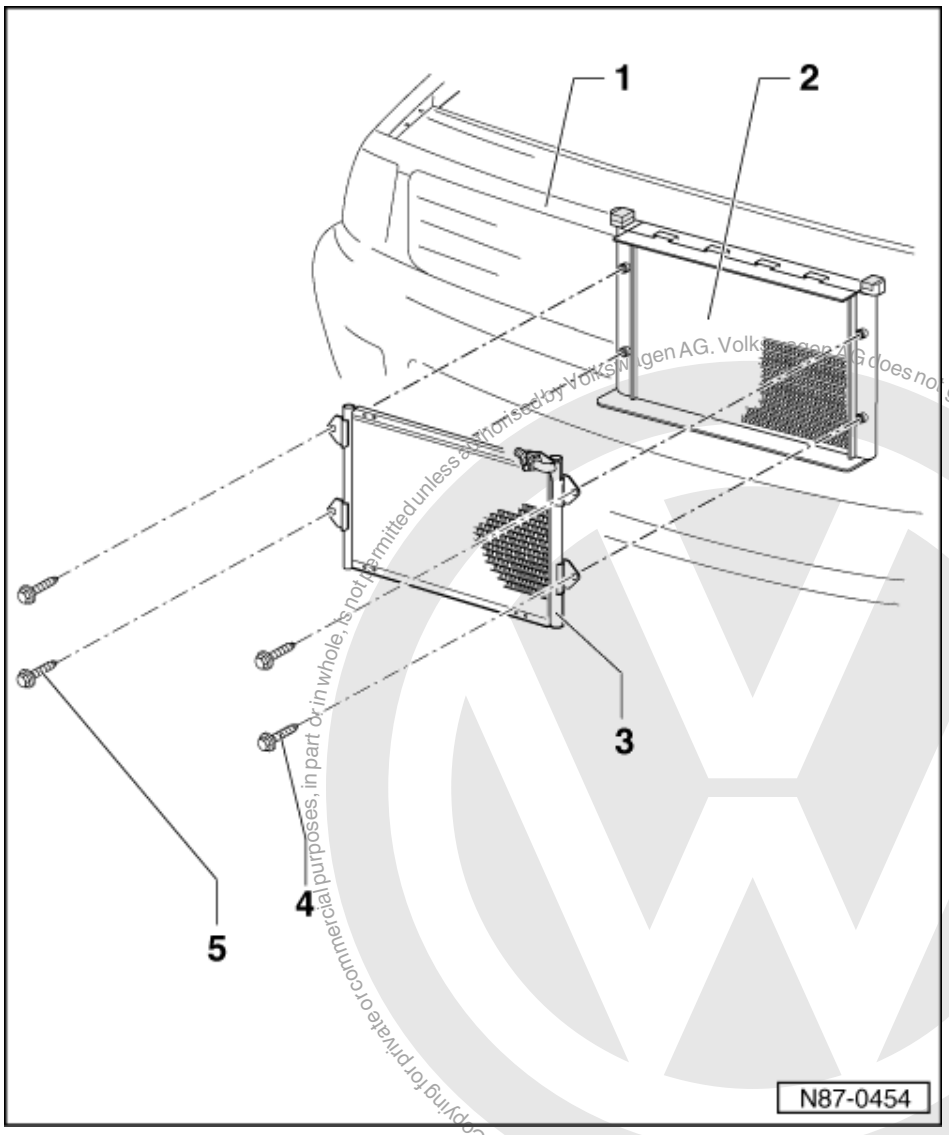

- All components of the refrigerant circuit which have been opened must be sealed with suitable plugs to prevent the ingress of humidity/moisture.

Perform following work first:

- Extract refrigerant with Service station V.A.G 1885.

Note:

Discharging refrigerant into the atmosphere is an offence.

- Remove lock carrier.

=> General body repairs, exterior; Repair group 50; Body front; Removing lock carrier. Body front Removing lock carrier.

- Remove refrigerant pipes/hoses on condenser and seal.
- Separate fluid container with dryer from condenser and seal pipes.

Protected by copyright. Copying for private or commercial purposes, in part or in whole, is not permitted unless authorised by Volkswagen AG. Volkswagen AG does not guarantee or accept any liability with respect to the correctness of information in this document. Copyright by Volkswagen AG.
satelettronica

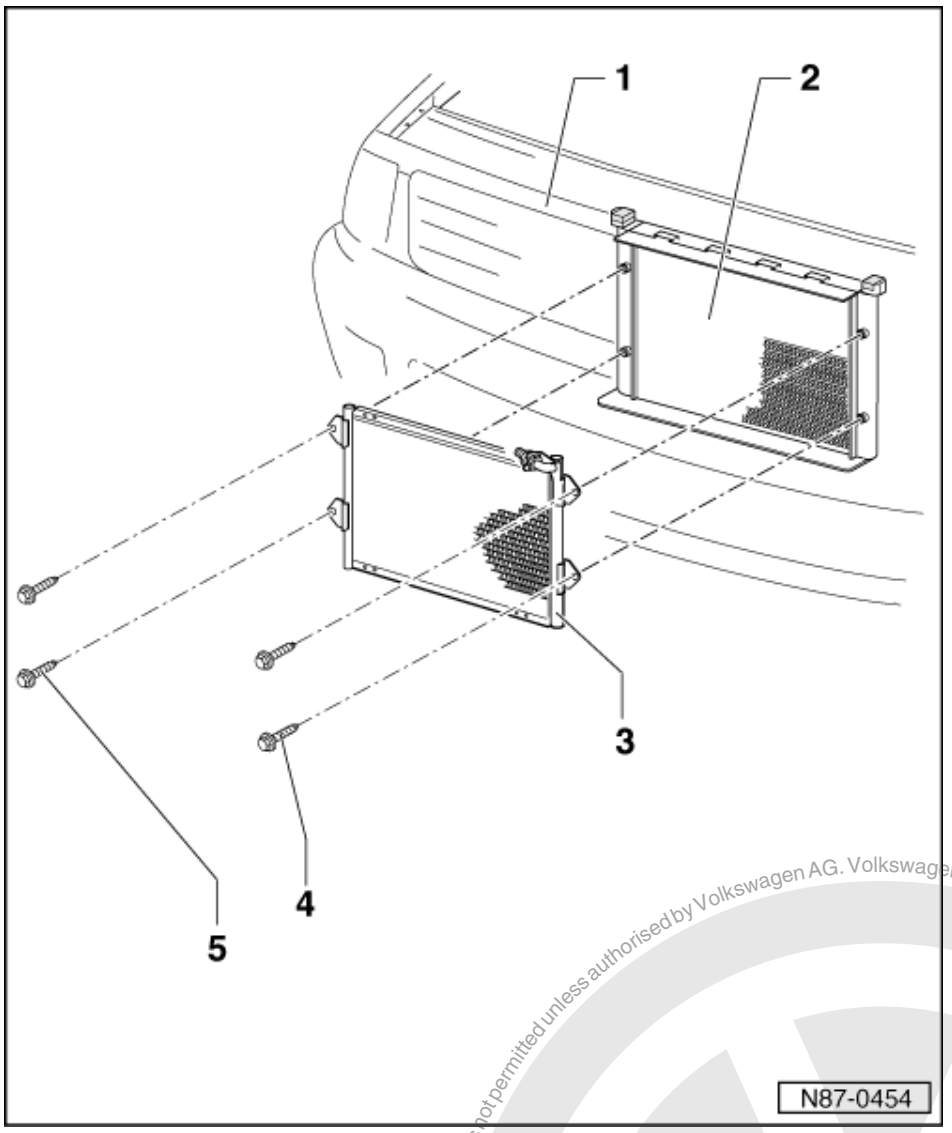

1 Lock carrier
- Removing:

=> General body repairs, exterior; Repair group 50; Body front; Removing lock carrier. Body front Removing lock carrier.

2 Cooler
3 Condenser
4 Bolts
- 8 Nm
- Qty. 4

Protected by copyright. Copying for private or commercial purposes, in part or in whole, is not permitted unless authorised by Volkswagen AG. Volkswagen AG does not guarantee or accept any liability with respect to the correctness of information in this document. Copyright by Volkswagen AG.
satelettronica

4 - Capacities

4.1 - Capacities

4.2 - Refrigerant R134a

Compressor	Manufacturer	Capacities
SD7-V16	Sanden	850+30 Gram

4.3 - Refrigerant oil

The special refrigerant oil (for use with refrigerant circuits R134a only) is no longer obtainable on the refrigerant/ machine oil market.

Refrigerant oil can be obtained using following part No.; for:	
SD7-V16 Compressor; Sanden	G 052 154 A2

Type	Production period	Capacity
Polo Classic / Estate	from 10.99	135cm3*

* This quantity of refrigerant oil is in a replacement compressor and equates to the capacity.

Further information:

The refrigerant oil is very hygroscopic, therefore opened containers must be closed immediately after use to stop ingress of moisture.

Refrigerant oil, because of its chemical properties, must not be disposed of with engine oils or gearbox oils.

Oil distribution

The oil is distributed through the refrigerant circuit, which is located in the sump of the compressor before initially switching the air conditioner system as follows:

- Compressor approx. 50%
- Condenser approx. 10%
- Suction hose approx. 10%
- Evaporator approx. 20%
- Fluid reservoir approx. 10%

satelettronica
Protected by copyright. Copying for private or commercial purposes, in part or in whole, is not permitted unless authorised by Volkswagen AG. Volkswagen AG does not guarantee or accept any liability with respect to the correctness of information in this document. Copyright by Volkswagen AG.